OMISTAJAN KÄSIKIRJA

AXOPAR 25 CROSS BOW
AXOPAR 25 CROSS TOP

MALLIVUOSI 2026

AXOPAR

DRAFT DRAFT DRAFT

DRAFT DRAFT DRAFT

DRAFT DRAFT DRAFT

DRAFT DRAFT DRAFT

DRAFT DRAFT DRAFT

DRAFT DRAFT DRAFT

DRAFT DRAFT DRAFT

DRAFT DRAFT DRAFT

DRAFT DRAFT DRAFT

DRAFT DRAFT DRAFT

DRAFT DRAFT DRAFT

DRAFT DRAFT DRAFT

DRAFT DRAFT DRAFT

DRAFT DRAFT DRAFT

DRAFT DRAFT DRAFT

DRAFT DRAFT DRAFT

DRAFT DRAFT DRAFT

DRAFT DRAFT DRAFT

DRAFT DRAFT DRAFT

DRAFT DRAFT DRAFT

DRAFT DRAFT DRAFT

DRAFT DRAFT DRAFT

DRAFT DRAFT DRAFT

DRAFT DRAFT DRAFT

DRAFT DRAFT DRAFT

DRAFT DRAFT DRAFT

DRAFT DRAFT DRAFT

DRAFT DRAFT DRAFT

DRAFT DRAFT DRAFT

DRAFT DRAFT DRAFT

DRAFT DRAFT DRAFT

DRAFT DRAFT DRAFT

DRAFT DRAFT DRAFT

DRAFT DRAFT DRAFT

DRAFT DRAFT DRAFT

DRAFT DRAFT DRAFT

DRAFT DRAFT DRAFT

DRAFT DRAFT DRAFT

DRAFT DRAFT DRAFT

DRAFT DRAFT DRAFT

DRAFT DRAFT DRAFT

DRAFT DRAFT DRAFT

DRAFT DRAFT DRAFT

DRAFT DRAFT DRAFT

DRAFT DRAFT DRAFT

DRAFT DRAFT DRAFT

DRAFT DRAFT DRAFT

DRAFT DRAFT DRAFT

DRAFT DRAFT DRAFT

DRAFT DRAFT DRAFT

DRAFT DRAFT DRAFT

DRAFT DRAFT DRAFT

DRAFT DRAFT DRAFT

DRAFT DRAFT DRAFT

DRAFT DRAFT DRAFT

DRAFT DRAFT DRAFT

DRAFT DRAFT DRAFT

DRAFT DRAFT DRAFT

DRAFT DRAFT DRAFT

DRAFT DRAFT DRAFT

DRAFT DRAFT DRAFT

DRAFT DRAFT DRAFT

DRAFT DRAFT DRAFT

DRAFT DRAFT DRAFT

DRAFT DRAFT DRAFT

DRAFT DRAFT DRAFT

DRAFT DRAFT DRAFT

DRAFT DRAFT DRAFT

DRAFT DRAFT DRAFT

DRAFT DRAFT DRAFT

DRAFT DRAFT DRAFT

DRAFT DRAFT DRAFT

DRAFT DRAFT DRAFT

DRAFT DRAFT DRAFT

DRAFT DRAFT DRAFT

DRAFT DRAFT DRAFT

DRAFT DRAFT DRAFT

DRAFT DRAFT DRAFT

REVISIONS			
REV.	DESCRIPTION	DATE	APPROVED

TANK PE STRIPS PREINSTALLATION

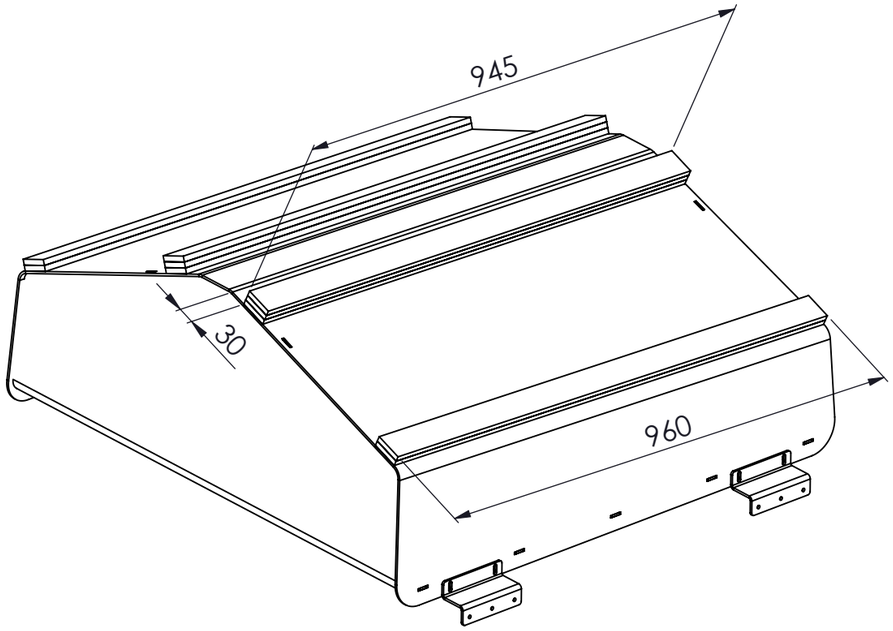

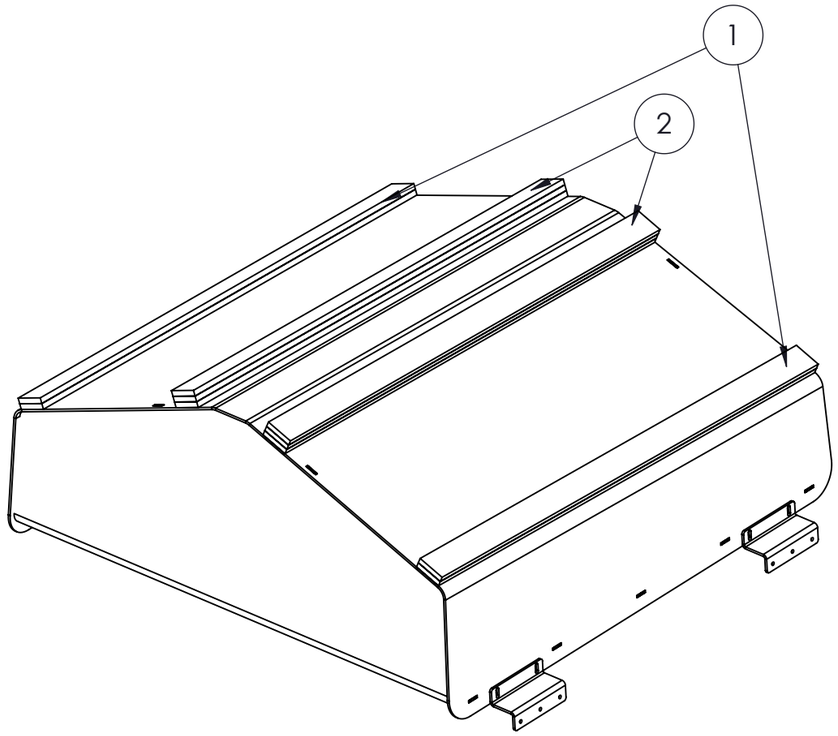

PART NO.	ITEM	DESCRIPTION	MATERIAL	SIZE, CAPACITY	QTY.
1	AXO3000305, A	GASKET	PLASTIC, PE	960 X 50 X 10, 60KG / M3	4
2	AXO3000305, A	GASKET	PLASTIC, PE	945 X 50 X 10, 60KG / M3	6

This document and the information contained in it is proprietary and confidential information of Axopar Boats Oy. Neither this document nor any of the information contained herein may be reproduced, disclosed to others, or used for any purpose other than for the purpose it has been provided without the prior written permission of Axopar Boats Oy.

AXOPAR

ITEM	REV
AXO9000193	A

BOAT MODEL	MODEL YEAR	DRAWING	REV
AX25	2022	DRW00144	0

	BY	DATE	DESCRIPTION	SCALE	PAGE
CREATED	PULSE2	09.08.2021	Fuel System,EU	1:10	1 / 3
CHECKED	L.C.	09.08.2021	TECHNICAL DESCRIPTION		
ACCEPTED	VVu	15.03.2022	Manufacturing specification		

PULSE YACHT DESIGN

REVISIONS			
REV.	DESCRIPTION	DATE	APPROVED

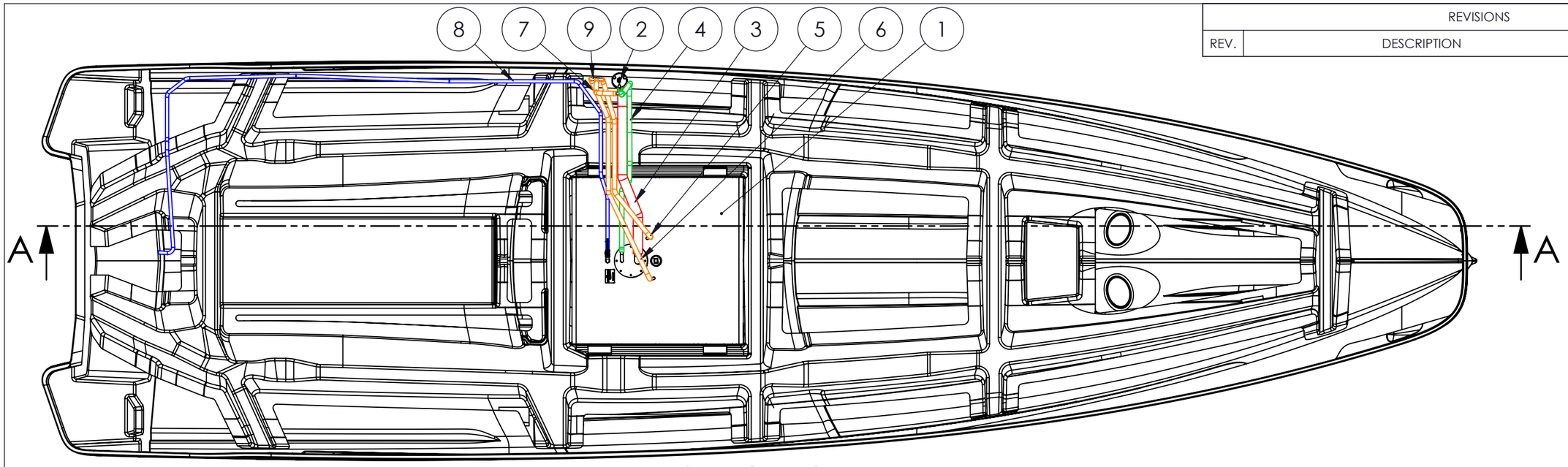

HULL-STRINGER TOP VIEW

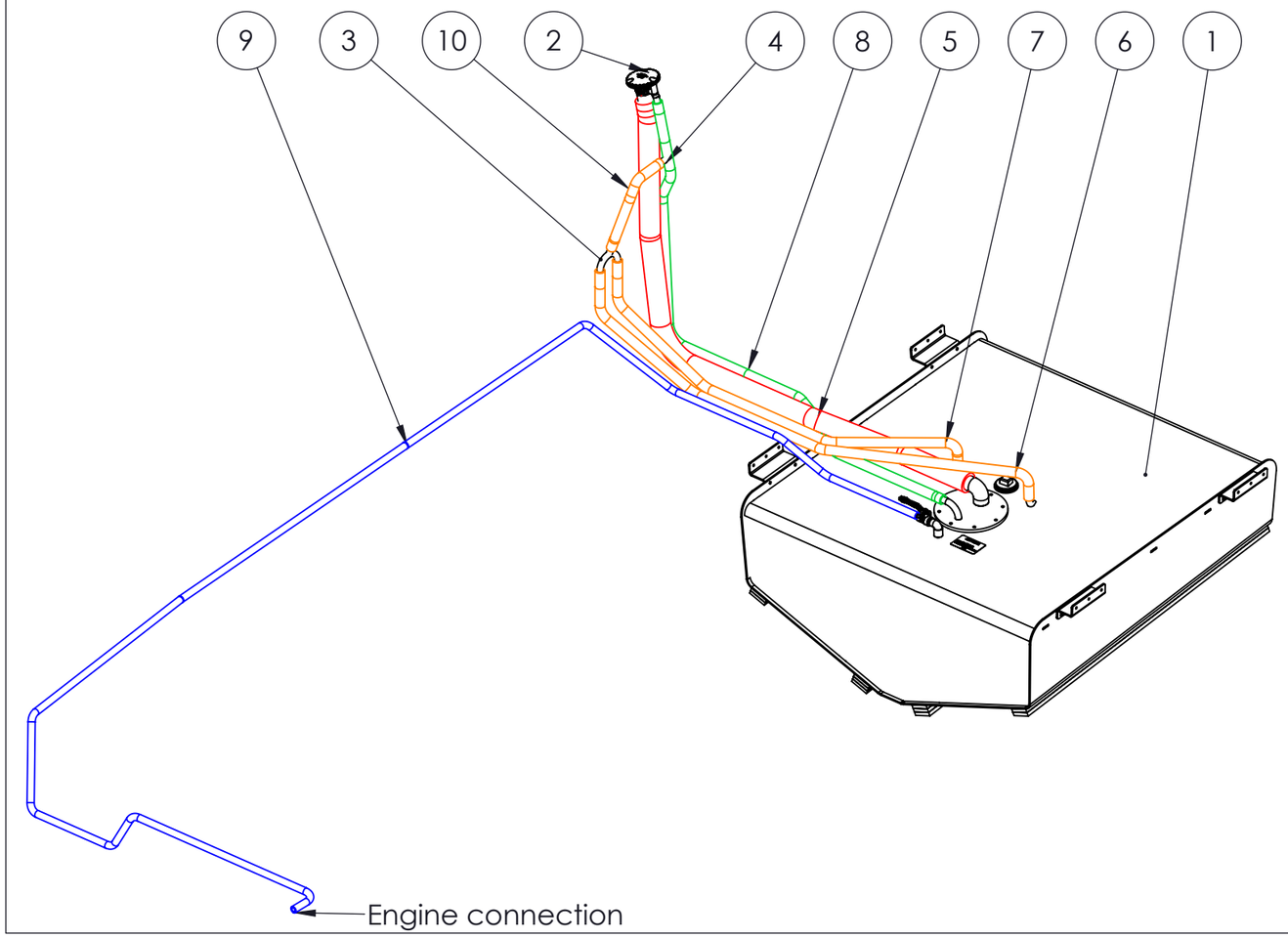

PART NO.	ITEM	DESCRIPTION	MATERIAL	SIZE, CAPACITY	LENGTH [m]	QTY.
1	AXO8000032, A	FUEL TANK	ALUMINIUM	238 L		1
2	AXO8000031, A	DECK FILLER	PLASTIC /CHROME	ø38, ø16		1
3	AXO8000040, A	FUEL HOSE	NBR RUBBER	ø38	1,7	1
4	AXO8000041, A	FUEL HOSE	NBR RUBBER	ø16	1,71	1
5	AXO8000041, A	FUEL HOSE	NBR RUBBER	ø16	1,21	1
6	AXO8000041, A	FUEL HOSE	NBR RUBBER	ø16	1,44	1
7	AXO8000041, A	FUEL HOSE	NBR RUBBER	ø16	0,35	1
8	AXO8000043, A	FUEL HOSE	NBR RUBBER	ø10	6	1
9	AXO8000086, A	T-CONNECTOR	ALUMINIUM	ø16		1
10	AXO8000090, A	T-CONNECTOR	PLASTIC, POM	ø16		1

This document and the information contained in it is proprietary and confidential information of Axopar Boats Oy. Neither this document nor any of the information contained herein may be reproduced, disclosed to others, or used for any purpose other than for the purpose it has been provided without the prior written permission of Axopar Boats Oy.

AXOPAR

ITEM	REV
AXO9000193	A

BOAT MODEL	MODEL YEAR	DRAWING	REV
AX25	2022	DRW00144	0

	BY	DATE	DESCRIPTION	SCALE	PAGE
CREATED	PULSE2	09.08.2021	Fuel System,EU	1:25	2 / 3
CHECKED	L.C.	09.08.2021	TECHNICAL DESCRIPTION		
ACCEPTED	VVu	15.03.2022	Manufacturing specification		

PULS YACHT DESIGN

REVISIONS			
REV.	DESCRIPTION	DATE	APPROVED

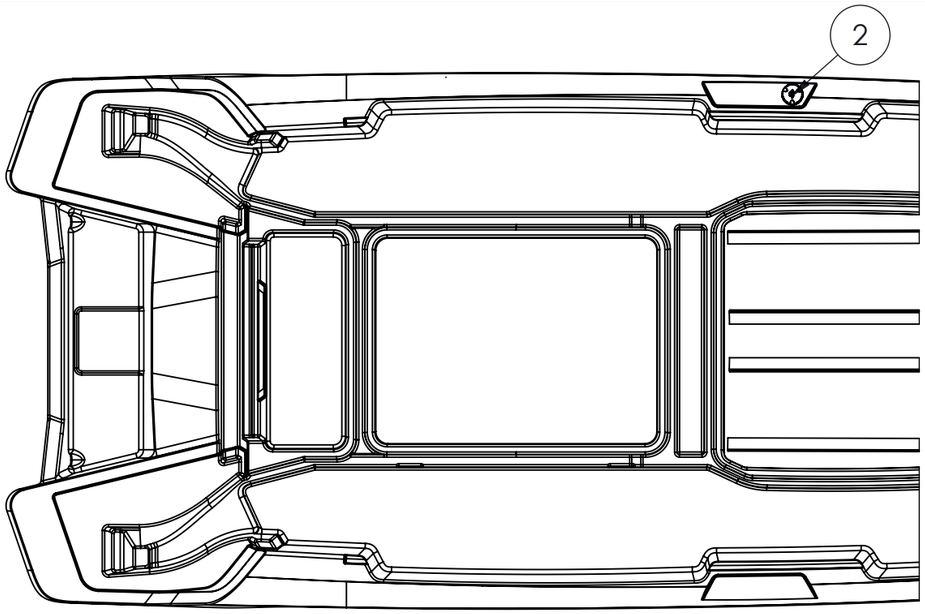

DECK TOP VIEW

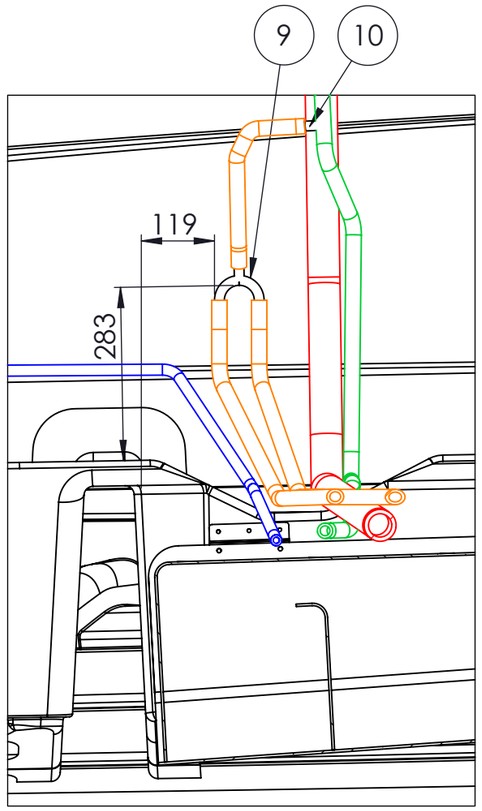

SECTION A-A
SCALE 1 : 10

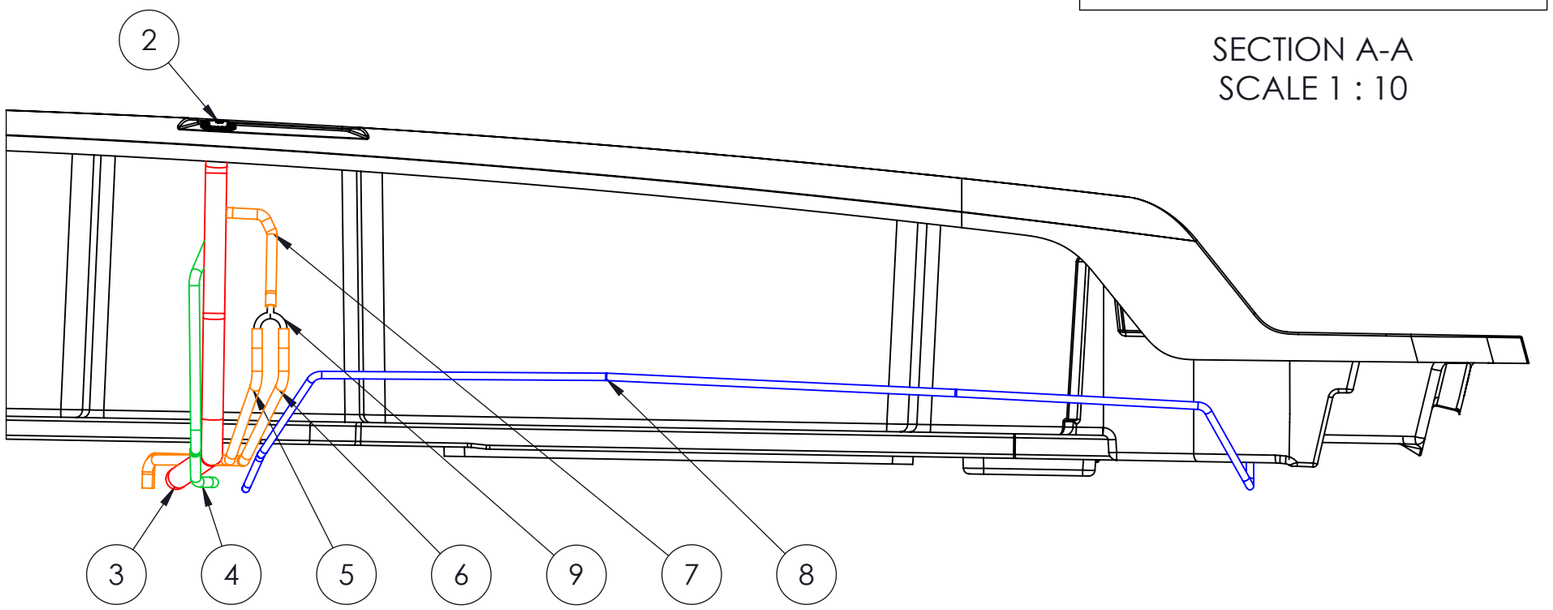

DECK PRE-MONTAGE
SCALE 1:15
Fuel hose supply route fixed onto the deck on the PS
Holes ∅10 inside PVC ∅25 conduit

This document and the information contained in it is proprietary and confidential information of Axopar Boats Oy. Neither this document nor any of the information contained herein may be reproduced, disclosed to others, or used for any purpose other than for the purpose it has been provided without the prior written permission of Axopar Boats Oy.

AXOPAR

ITEM	REV
AXO9000193	A

BOAT MODEL	MODEL YEAR	DRAWING	REV
AX25	2022	DRW00144	0

	BY	DATE	DESCRIPTION	SCALE	PAGE
CREATED	PULSE2	09.08.2021	Fuel System,EU	1:25	3 / 3
CHECKED	L.C.	09.08.2021	TECHNICAL DESCRIPTION		
ACCEPTED	VVu	15.03.2022	Manufacturing specification		

PULSE YACHT DESIGN

REVISIONS			
REV.	DESCRIPTION	DATE	APPROVED

TANK PE STRIPS PREINSTALLATION

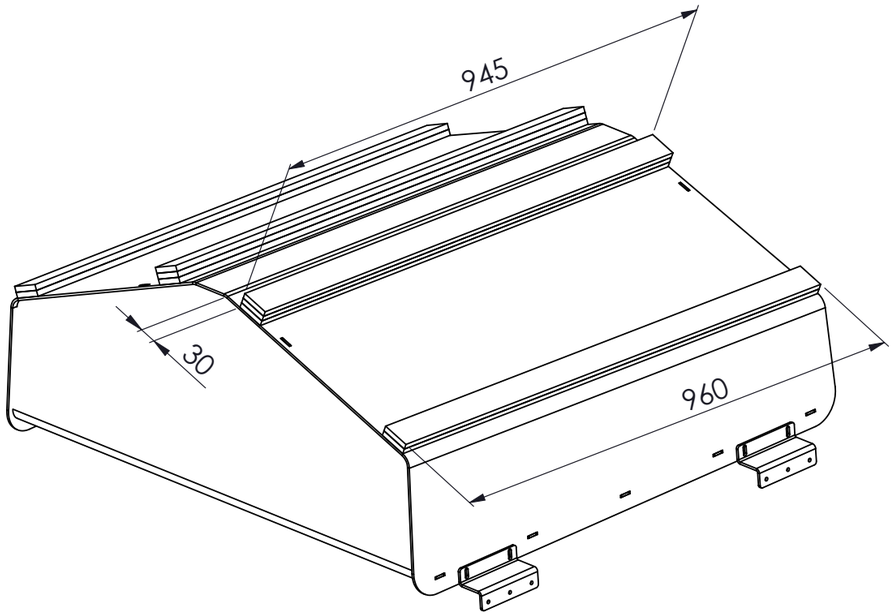

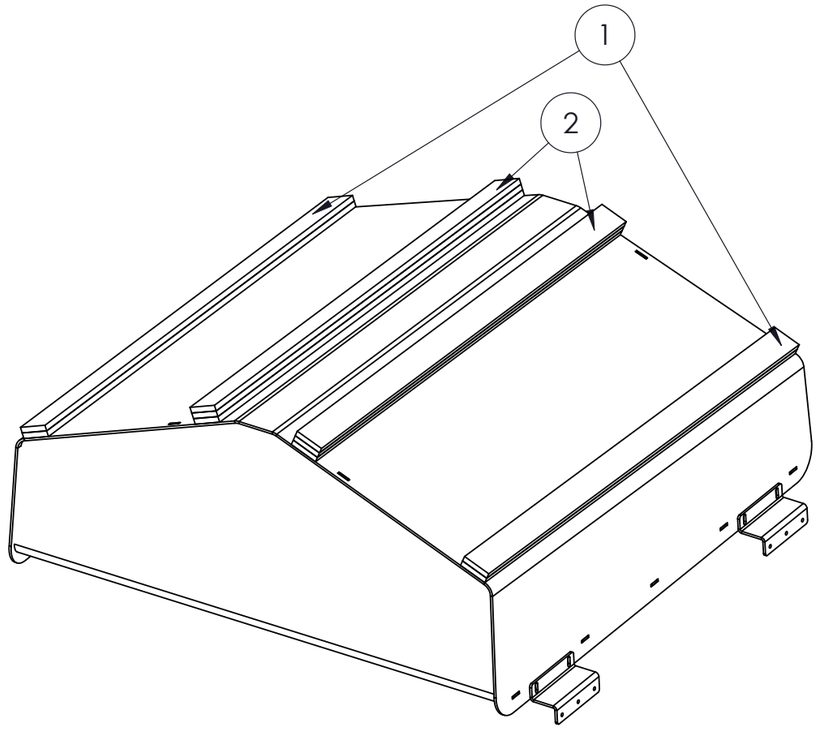

PART NO.	ITEM	MATERIAL	SIZE, CAPACITY	QTY.
11	AXO3000305, A	PLASTIC, PE	960 X 50 X 10, 60KG / M3	4
12	AXO3000305, A	PLASTIC, PE	945 X 50 X 10, 60KG / M3	6

This document and the information contained in it is proprietary and confidential information of Axopar Boats Oy. Neither this document nor any of the information contained herein may be reproduced, disclosed to others, or used for any purpose other than for the purpose it has been provided without the prior written permission of Axopar Boats Oy.

AXOPAR		ITEM AXO9000194	REV A
BOAT MODEL AX25	MODEL YEAR 2022	DRAWING DRW00491	REV 0

	BY	DATE	DESCRIPTION	SCALE	PAGE
CREATED	PULSE2	31.08.2021	Fuel system,US	1:10	1 / 3
CHECKED	L.C.	31.08.2021	TECHNICAL DESCRIPTION		
ACCEPTED	VVu	15.03.2022	Manufacturing specification		

PULSE YACHT DESIGN

REVISIONS			
REV.	DESCRIPTION	DATE	APPROVED

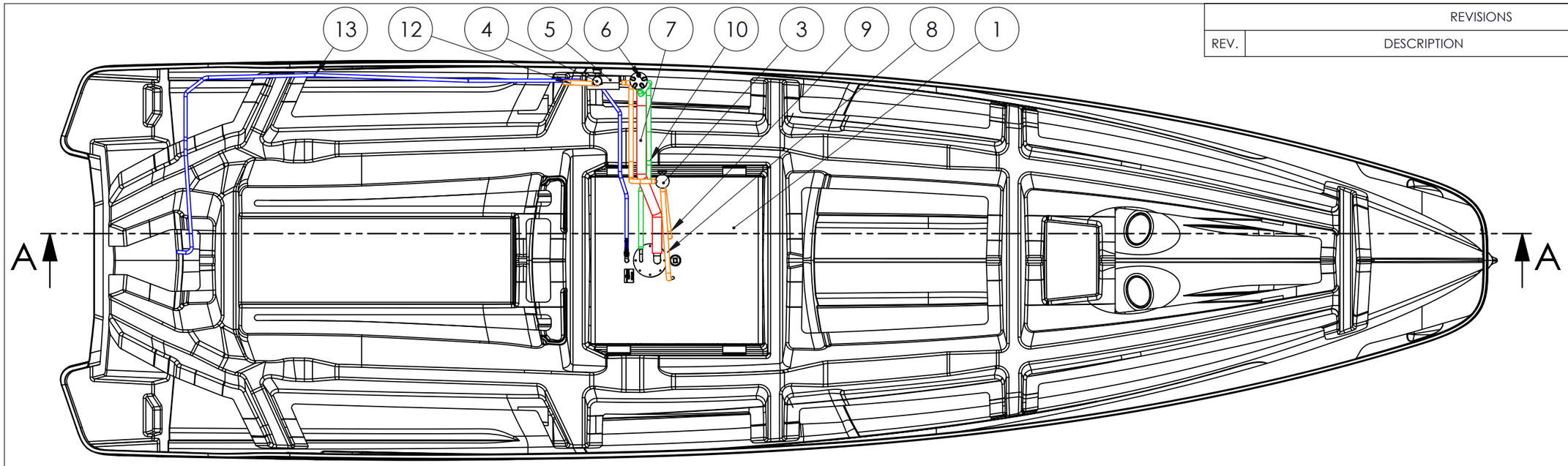

HULL-STRINGER TOP VIEW

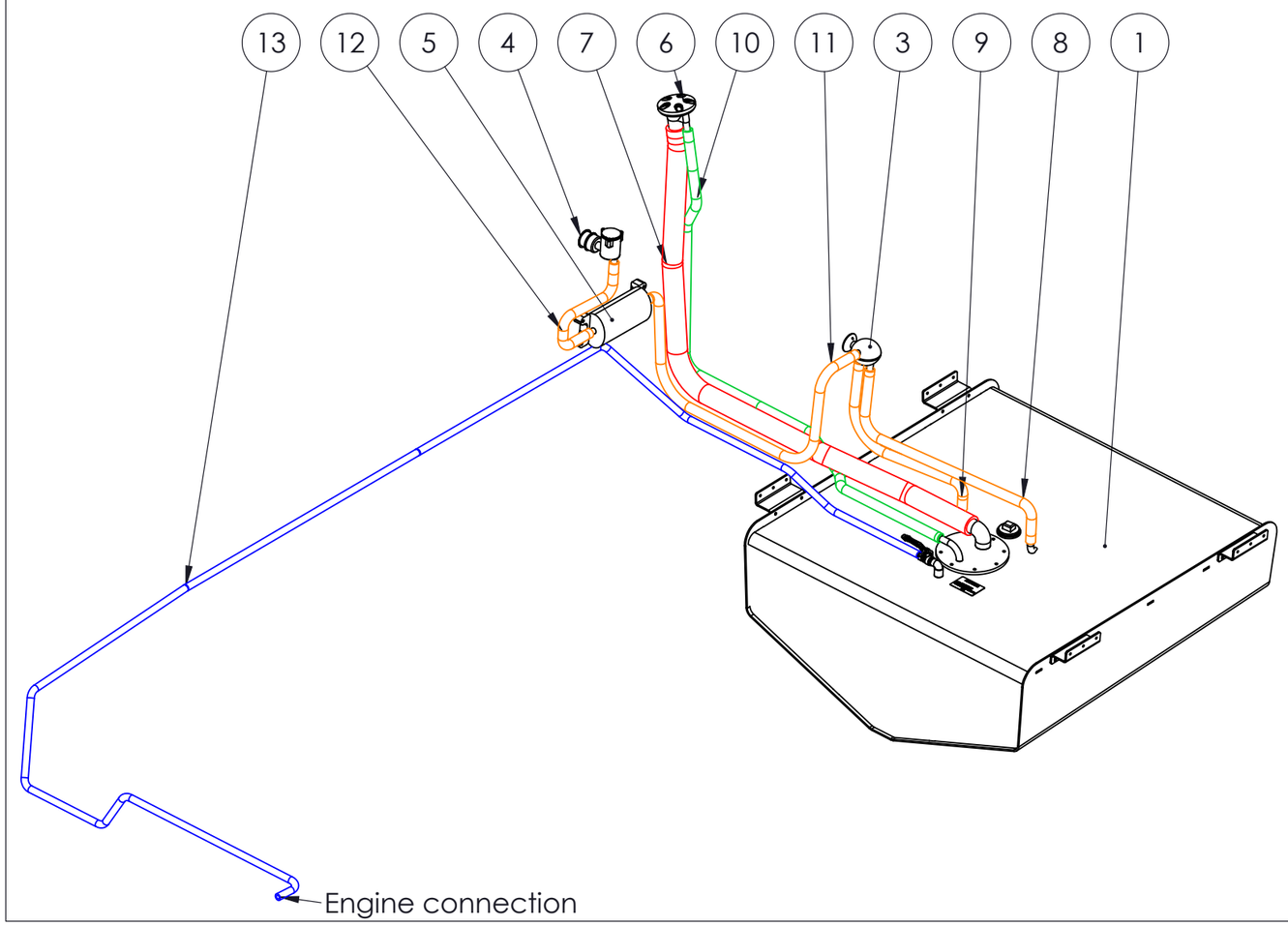

PART NO.	ITEM	DESCRIPTION	MATERIAL	SIZE, CAPACITY	LENGTH [m]	QTY.
1	AXO8000032, A	FUEL TANK	ALUMINIUM	238 L		1
2	AXO8000081, A	CHECK VALVE	PLASTIC	ø38MM, (1-1/2")		1
3	AXO8000084, A	AIR/FUEL SEPARATOR	PLASTIC, POLYMER	ø16MM, (5/8")		1
4	AXO8000082, A	TANK VENTILATOR		ø16MM, (5/8")		1
5	AXO8000083, A	CARBON CANISTER	PLASTIC	ø16MM/ ø16MM (5/8" - 5/8")		1
6	AXO8000085, A	DECK FILLER (FUEL)	POLYMER BODY, CHROME PLATED BRONZE CAP	ø38MM / ø16MM		1
7	AXO8000040, A	FUEL HOSE	NBR RUBBER	ø38	1,7	1
8	AXO8000041, A	FUEL HOSE	NBR RUBBER	ø16	0,8	1
9	AXO8000041, A	FUEL HOSE	NBR RUBBER	ø16	0,6	1
10	AXO8000041, A	FUEL HOSE	NBR RUBBER	ø16	1,7	1
11	AXO8000041, A	FUEL HOSE	NBR RUBBER	ø16	1,2	1
12	AXO8000041, A	FUEL HOSE	NBR RUBBER	ø16	0,5	1
13	AXO8000043, A	FUEL HOSE	NBR RUBBER	ø10	6	1

This document and the information contained in it is proprietary and confidential information of Axopar Boats Oy. Neither this document nor any of the information contained herein may be reproduced, disclosed to others, or used for any purpose other than for the purpose it has been provided without the prior written permission of Axopar Boats Oy.

AXOPAR

ITEM	REV
AXO9000194	A

BOAT MODEL	MODEL YEAR	DRAWING	REV
AX25	2022	DRW00491	0

	BY	DATE	DESCRIPTION	SCALE	PAGE
CREATED	PULSE2	31.08.2021	Fuel system,US	1:25	1 / 2
CHECKED	L.C.	31.08.2021	TECHNICAL DESCRIPTION		
ACCEPTED	VVu	15.03.2022	Manufacturing specification		

PULS YACHT DESIGN

REVISIONS			
REV.	DESCRIPTION	DATE	APPROVED

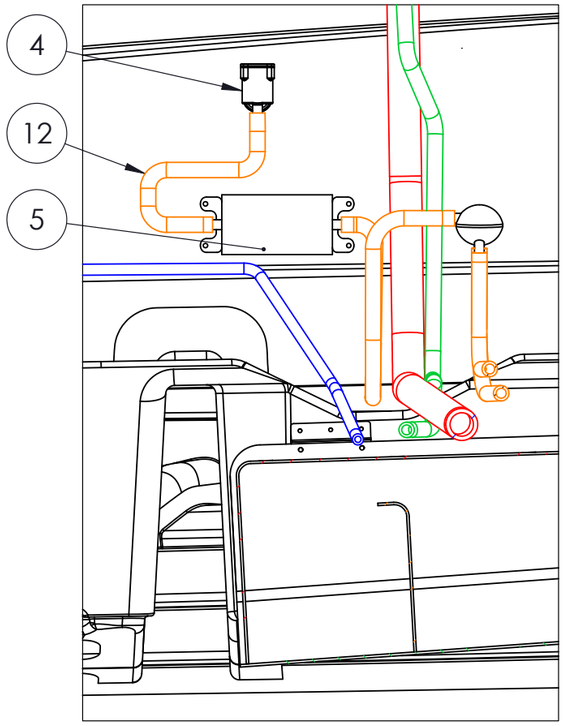

SECTION A-A

SCALE 1 : 10

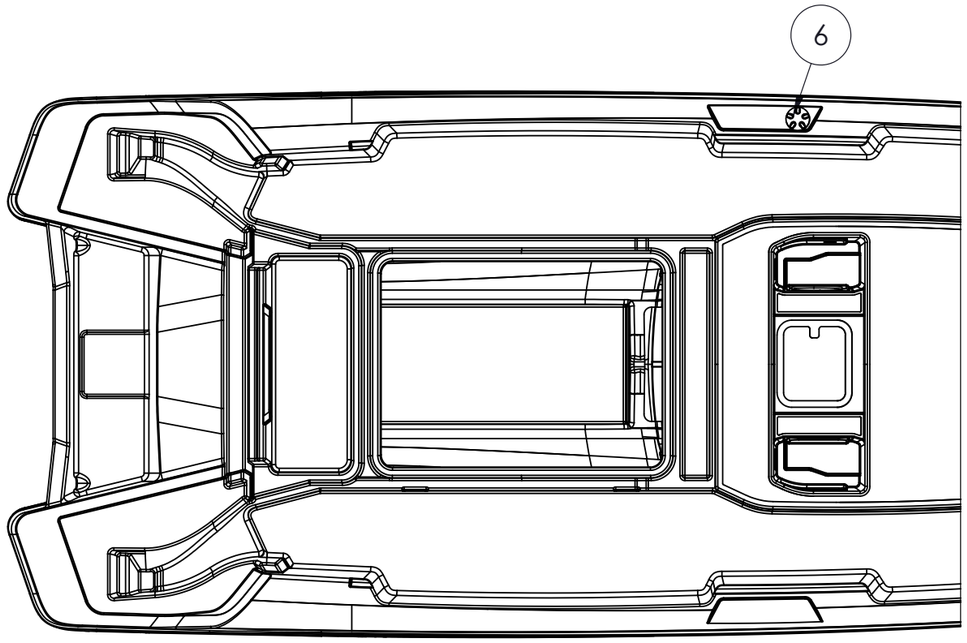

DECK TOP VIEW

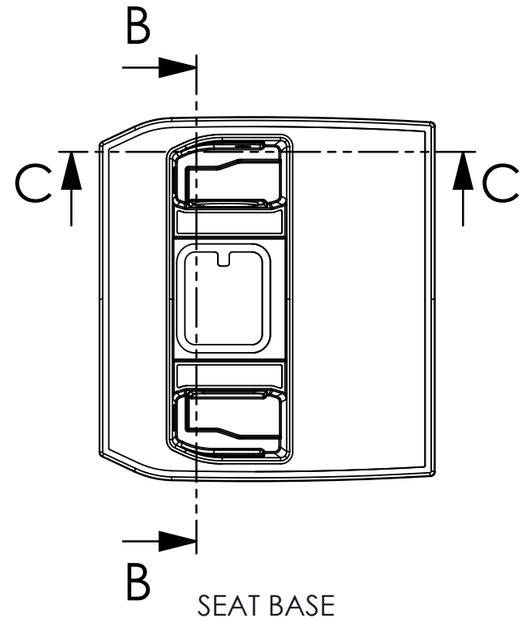

SEAT BASE
AIR/FUEL SEPARATOR POSITION
SCALE 1:20

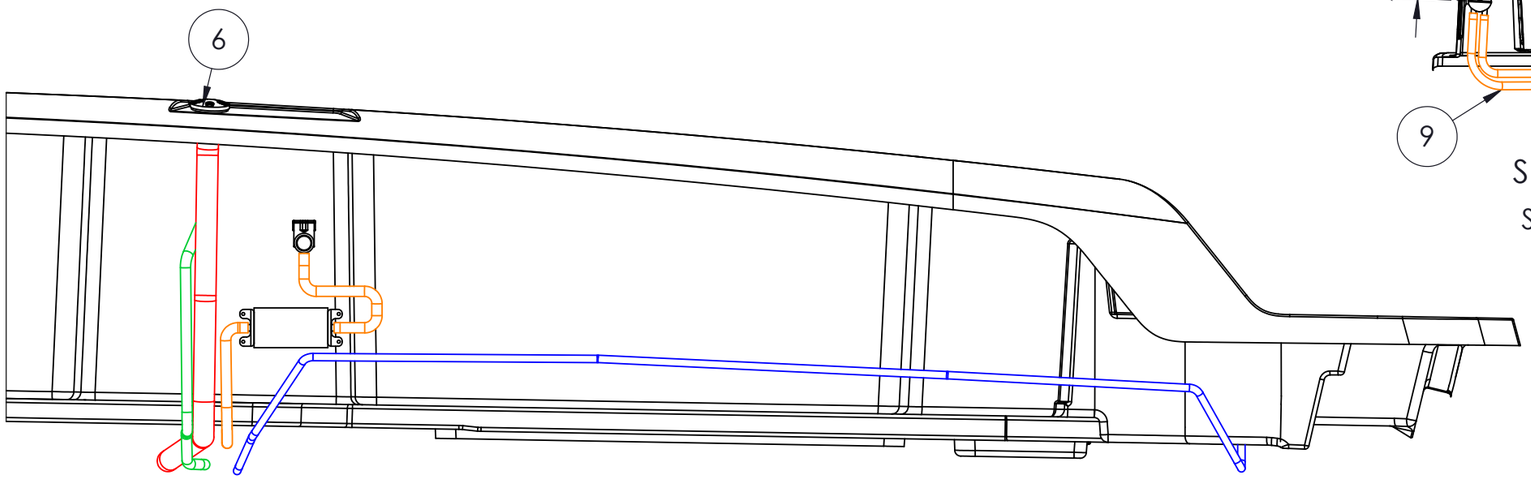

DECK PRE-MOTAGE
SCALE 115
Fuel hose supply route fixed onto the deck on the PS
Holes ∅10 inside PVC ∅25 conduit

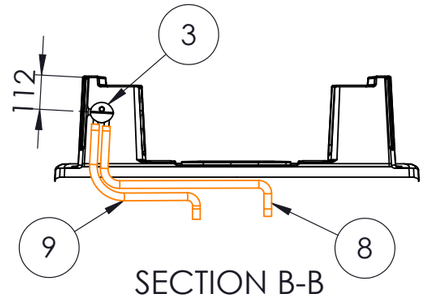

SECTION B-B

SCALE 1 : 20

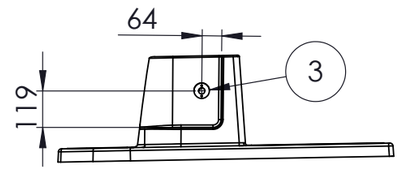

SECTION C-C

SCALE 1 : 20

This document and the information contained in it is proprietary and confidential information of Axopar Boats Oy. Neither this document nor any of the information contained herein may be reproduced, disclosed to others, or used for any purpose other than for the purpose it has been provided without the prior written permission of Axopar Boats Oy.

AXOPAR			ITEM	REV	
			AXO9000194	A	
BOAT MODEL		MODEL YEAR	DRAWING	REV	
AX25		2022	DRW00491	0	
	BY	DATE	DESCRIPTION	SCALE	PAGE
CREATED	PULSE2	31.08.2021	Fuel system,US	1:25	2 / 2
CHECKED	L.C.	31.08.2021	TECHNICAL DESCRIPTION		
ACCEPTED	VVu	15.03.2022	Manufacturing specification		

PULSE YACHT DESIGN

DRAFT DRAFT DRAFT

Axopar 25

ELECTRICAL DIAGRAM / PRODUCTION DRAWINGS

DOCUMENT INCLUDES:
BOAT HARNESS / PANEL GENERAL LAYOUT
ELECTRICAL STRUCTURE OF 12V DC SYSTEM (EURO/USA)
12V DC DIAGRAM
PRODUCTION DRAWINGS

NOTE! ALL CABLE AREAS ARE IN METRIC SYSTEM (mm2).

REVISION D7

5.3.2024	PF	D7: 2005068; NOT MODIFIED	Date	11.5.2020
02.09.2022	TT	D5: NOT MODIFIED	Drawing by	TuM
16.06.2023	TT	D6: NOT MODIFIED	Sheet rev.	7
Date of modification	Modified by	Description	Project rev.	D

This document and all the information contained in it is proprietary and confidential information of Axopar Boats Oy. Neither this document nor any of the information contained herein may be reproduced, disclosed to others or used in any purpose other then for the prpose it has been provided without theprior writen permission of Axopar Boats Oy

Axopar			
Boat	Sub-product code	Product code	Project ID
25	COVER	HL	1/ 47
Boat model	Title	Loc	Sheet

LEGEND:
(APPLIES ONLY THIS PAGE)

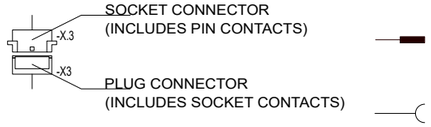

OR — ALL PRODUCTS TIED "OR" -LABEL ARE ALTERNATIVE OPTIONS DEPENDING THE SET-UP OR MODEL OF BOAT. BOTH PRODUCTS WITH "OR" -LABEL CANNOT INSTALL TO BOAT.

NOTE! CONNECTOR NAME LIKE "X3" IS HEADER ONLY FOR EXAMPLE X3 CONNECTORS INCLUDES VARIOUS CONNECTORS:
X3a, X3b, X3c, X3d, X3e, X3f and X3g.
MORE DETAILS IN ELECTRIC SCHEMATIC AND PRODUCTION DRAWINGS.

HARNESS STRUCTURE

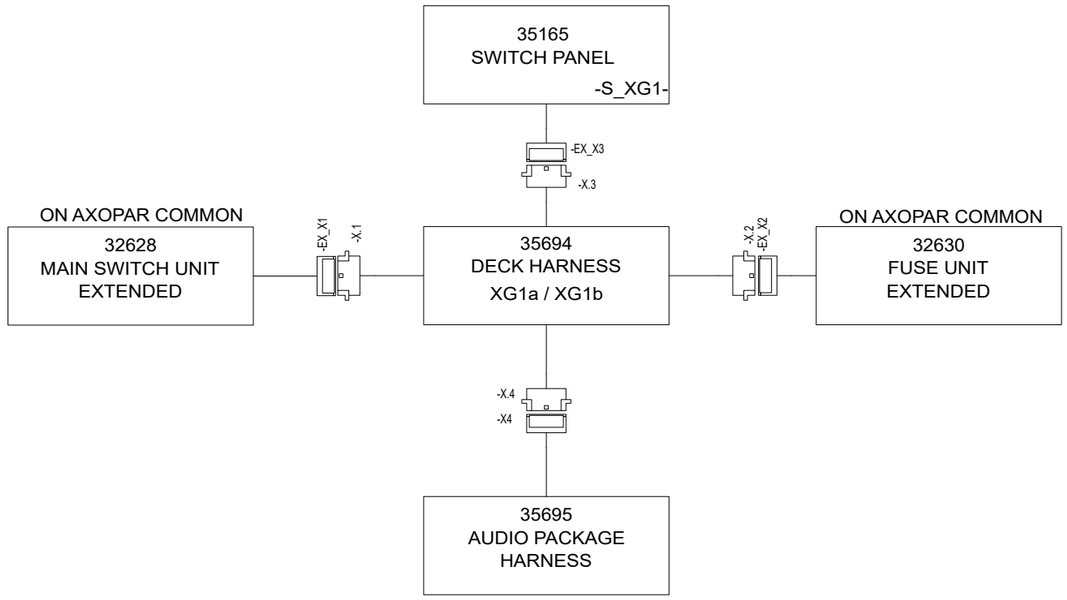

POWER CABLES STRUCTURE

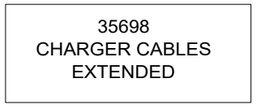

5.3.2024	PF	D7: 2005068; NOT MODIFIED	Date	11.5.2020
02.09.2022	TT	D5: NOT MODIFIED	Drawing by	TuM
16.06.2023	TT	D6: NOT MODIFIED	Sheet rev.	7
Date of modification	Modified by	Description	Project rev.	D

This document and all the information contained in it is proprietary and confidential information of Axopar Boats Oy. Neither this document nor any of the information contained herein may be reproduced, disclosed to others or used in any purpose other then for the prpose it has been provided without theprior writen permission of Axopar Boats Oy

Axopar			
Boat	Sub-product code	Product code	Project ID
25	12Vdc STRUCTURE	HL	2 / 47
Boat model	Title	Loc	Sheet

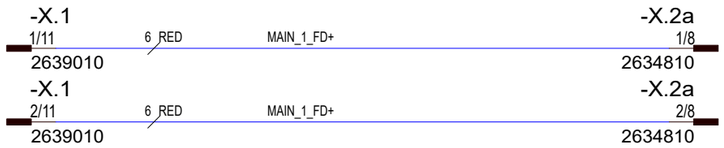

REST OF DIAGRAM
FOUNDED IN AXOPAR 22 PROJECT

12VDC

5.3.2024	PF	D7: 2005068; NOT MODIFIED	Date	11.5.2020
02.09.2022	TT	D5: NOT MODIFIED	Drawing by	TuM
16.06.2023	TT	D6: NOT MODIFIED	Sheet rev.	7
Date of modification	Modified by	Description	Project rev.	D

This document and all the information contained in it is proprietary and confidential information of Axopar Boats Oy. Neither this document nor any of the information contained herein may be reproduced, disclosed to others or used in any purpose other then for the prpose it has been provided without theprior writen permission of Axopar Boats Oy

Axopar Boat	Sub-product code	Product code	Project ID
25 Boat model	DIAGRAM - MAIN FUSES Title	HL Loc	3 / 47 Sheet

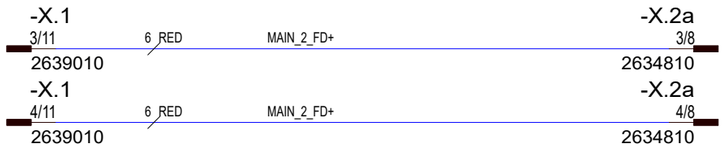

REST OF DIAGRAM
FOUNDED IN AXOPAR 22 PROJECT

12VDC

5.3.2024	PF	D7: 2005068; NOT MODIFIED	Date	11.5.2020
02.09.2022	TT	D5: NOT MODIFIED	Drawing by	TuM
16.06.2023	TT	D6: NOT MODIFIED	Sheet rev.	7
Date of modification	Modified by	Description	Project rev.	D

This document and all the information contained in it is proprietary and confidential information of Axopar Boats Oy. Neither this document nor any of the information contained herein may be reproduced, disclosed to others or used in any purpose other then for the prpose it has been provided without theprior writen permission of Axopar Boats Oy

Axopar Boat	Sub-product code	Product code	Project ID
25 Boat model	DIAGRAM - MAIN FUSES Title	HL Loc	4 / 47 Sheet

REST OF DIAGRAM
FOUNDED IN AXOPAR 22 PROJECT

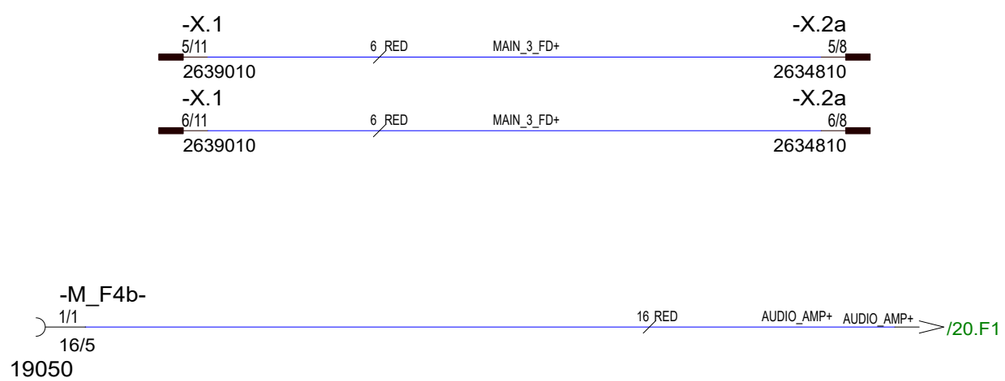

12VDC

5.3.2024	PF	D7: 2005068; NOT MODIFIED	Date	11.5.2020
02.09.2022	TT	D5: NOT MODIFIED	Drawing by	TuM
16.06.2023	TT	D6: NOT MODIFIED	Sheet rev.	7
Date of modification	Modified by	Description	Project rev.	D

This document and all the information contained in it is proprietary and confidential information of Axopar Boats Oy. Neither this document nor any of the information contained herein may be reproduced, disclosed to others or used in any purpose other then for the prpose it has been provided without theprior writen permission of Axopar Boats Oy

Axopar Boat	Sub-product code	Product code	Project ID
25 Boat model	DIAGRAM - MAIN FUSES Title	HL Loc	5 / 47 Sheet

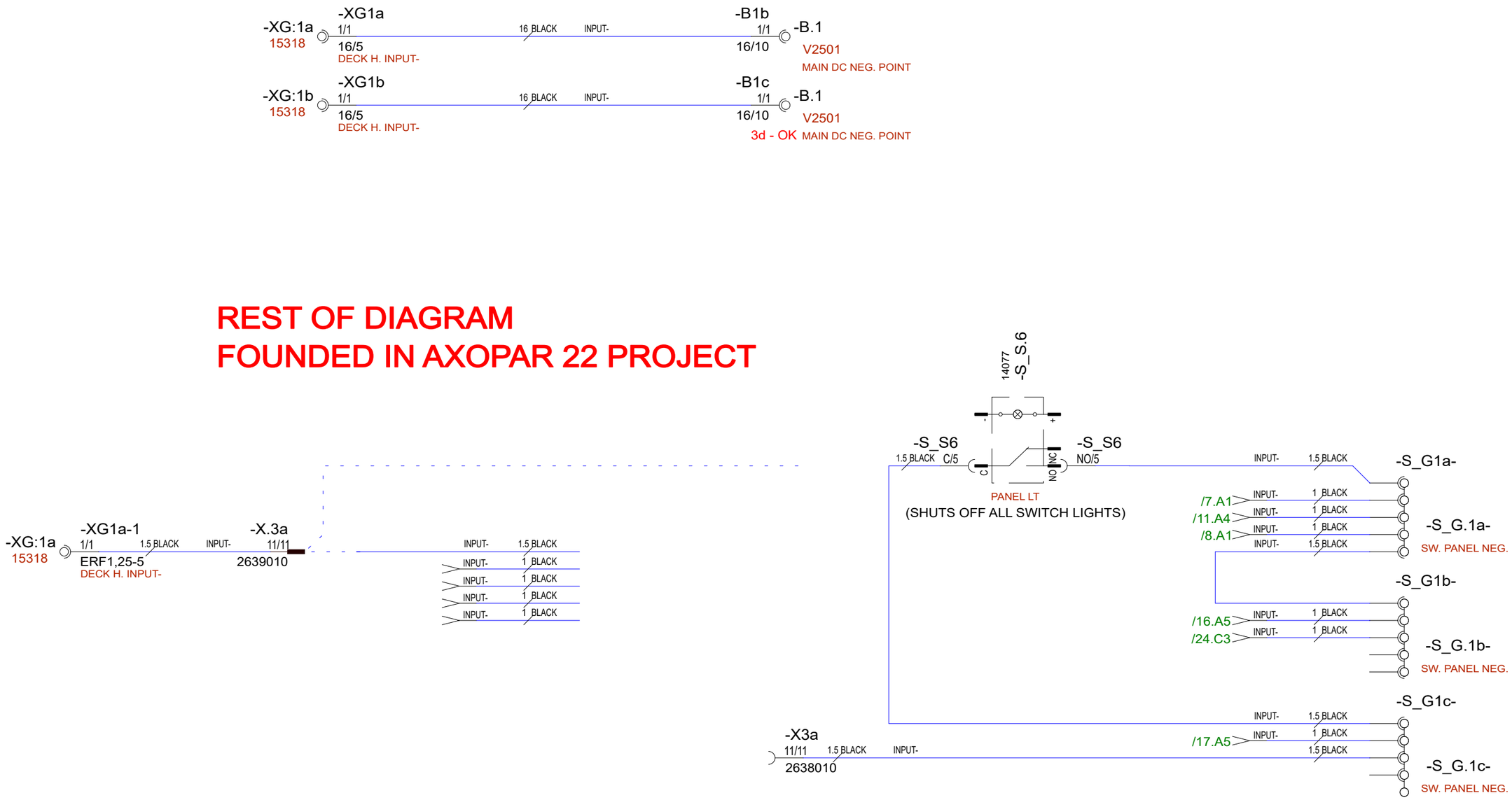

5.3.2024	PF	D7: 2005068; NOT MODIFIED	Date	10.6.2020	This document and all the information contained in it is proprietary and confidential information of Axopar Boats Oy. Neither this document nor any of the information contained herein may be reproduced, disclosed to others or used in any purpose other then for the prpose it has been provided without theprior writen permission of Axopar Boats Oy	Axopar		
02.09.2022	TT	D5: NOT MODIFIED	Drawing by	TuM		Boat	Sub-product code	Product code	Project ID
16.06.2023	TT	D6: NOT MODIFIED	Sheet rev.	7	AXOPAR / BRABUS MARINE	25	DIAGRAM - INPUT-	HL	6 / 47
Date of modification	Modified by	Description	Project rev.	D		Boat model	Title	Loc	Sheet

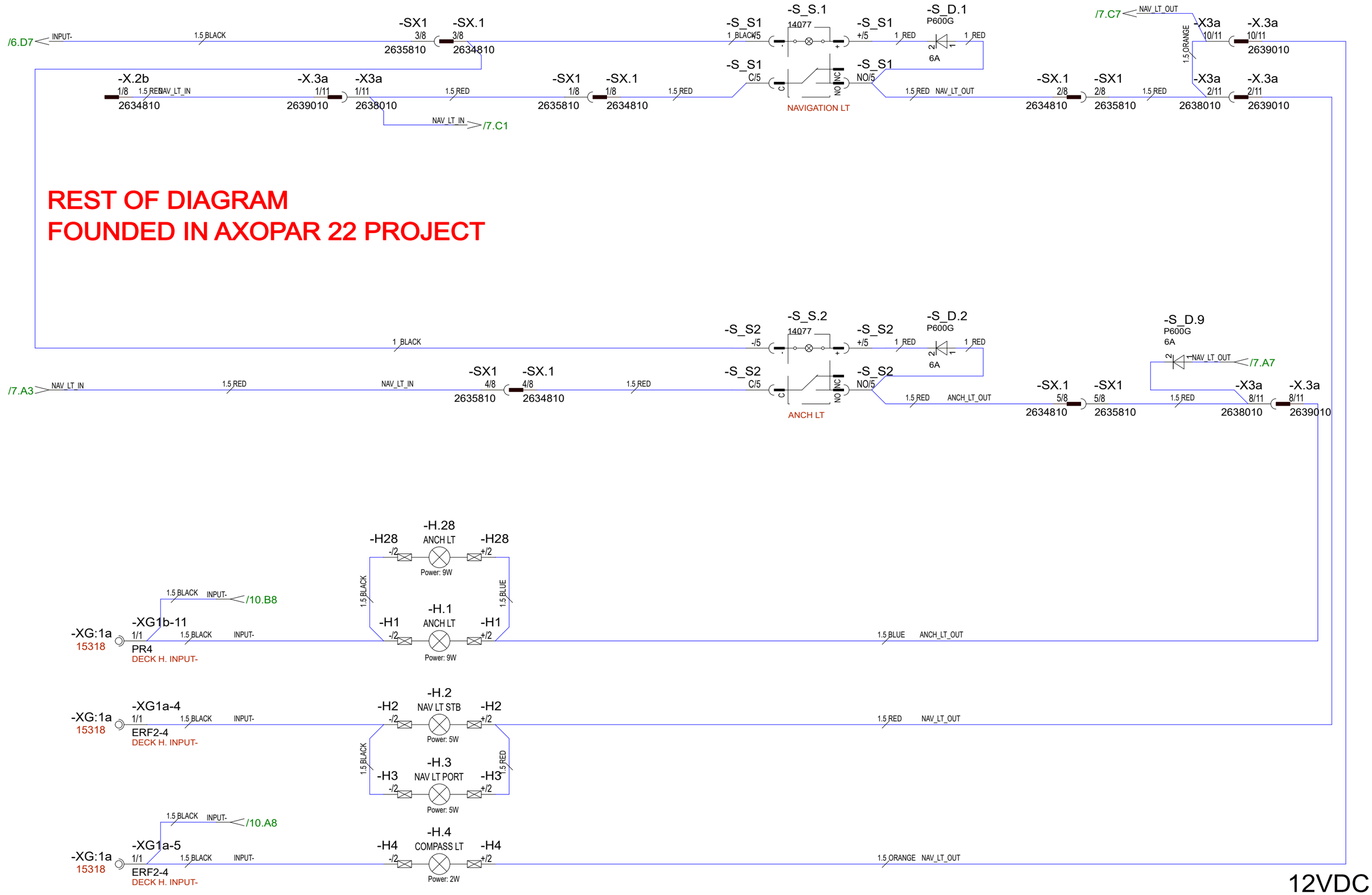

5.3.2024	PF	D7: 2005068; NOT MODIFIED	Date	11.5.2020	This document and all the information contained in it is proprietary and confidential information of Axopar Boats Oy. Neither this document nor any of the information contained herein may be reproduced, disclosed to others or used in any purpose other then for the prpose it has been provided without theprior writen permission of Axopar Boats Oy	Axopar		
02.09.2022	TT	D5: -H.22 ADDED	Drawing by	TuM		Boat	Sub-product code	Product code	Project ID
16.06.2023	TT	D6: NOT MODIFIED	Sheet rev.	7	AXOPAR / BRABUS MARINE	25	DIAGRAM - NAVIGATION LT	HL	7 / 47
Date of modification	Modified by	Description	Project rev.	D		Boat model	Title	Loc	Sheet

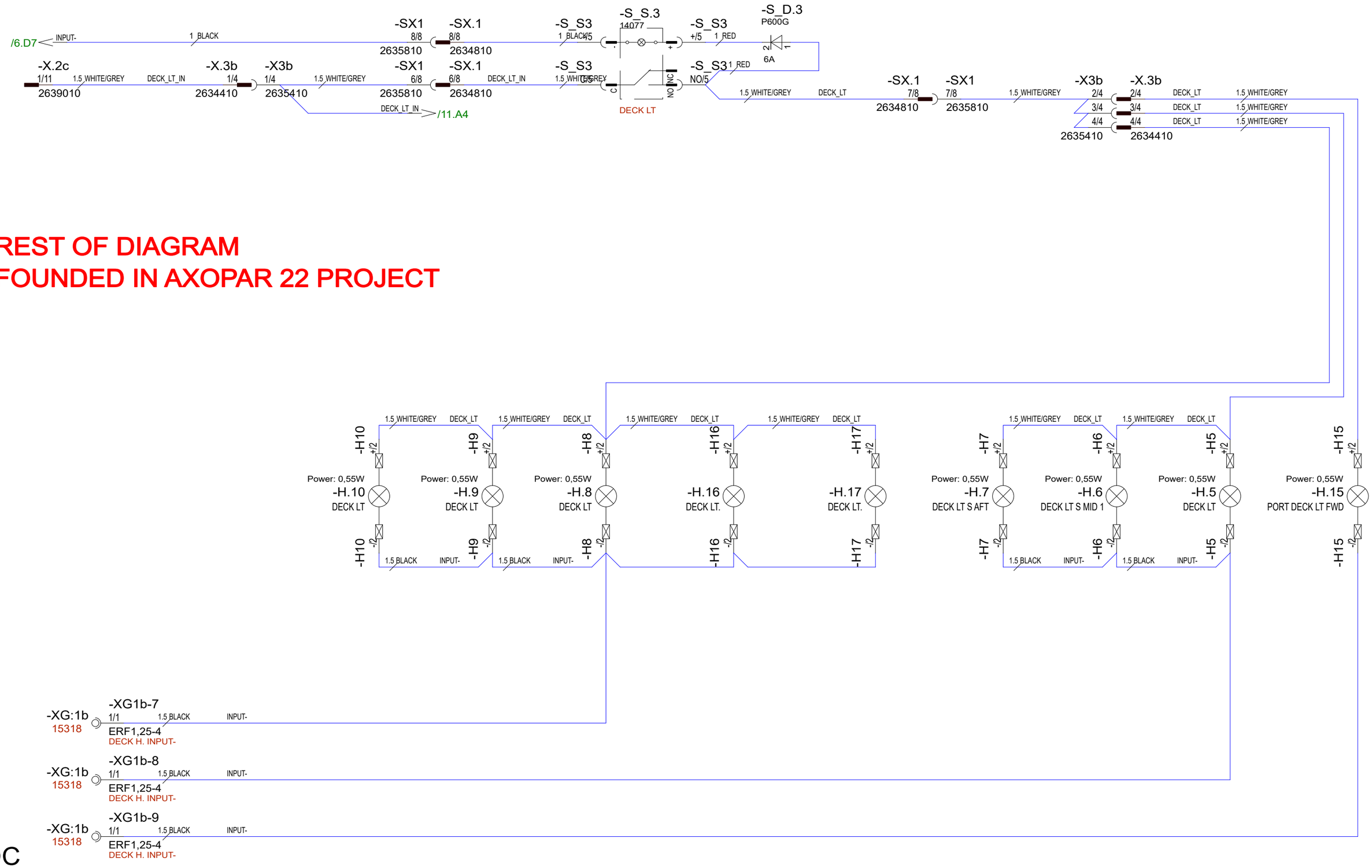

REST OF DIAGRAM
FOUNDED IN AXOPAR 22 PROJECT

12VDC

5.3.2024	PF	D7: 2005068; NOT MODIFIED	Date	11.5.2020
02.09.2022	TT	D5: -H.11 REMOVED	Drawing by	TuM
16.06.2023	TT	D6: NOT MODIFIED	Sheet rev.	7
Date of modification	Modified by	Description	Project rev.	D

This document and all the information contained in it is proprietary and confidential information of Axopar Boats Oy. Neither this document nor any of the information contained herein may be reproduced, disclosed to others or used in any purpose other then for the prpose it has been provided without theprior writen permission of Axopar Boats Oy

Axopar			
Boat	Sub-product code	Product code	Project ID
25	DIAGRAM - DECK LT	HL	8 / 47
Boat model	Title	Loc	Sheet

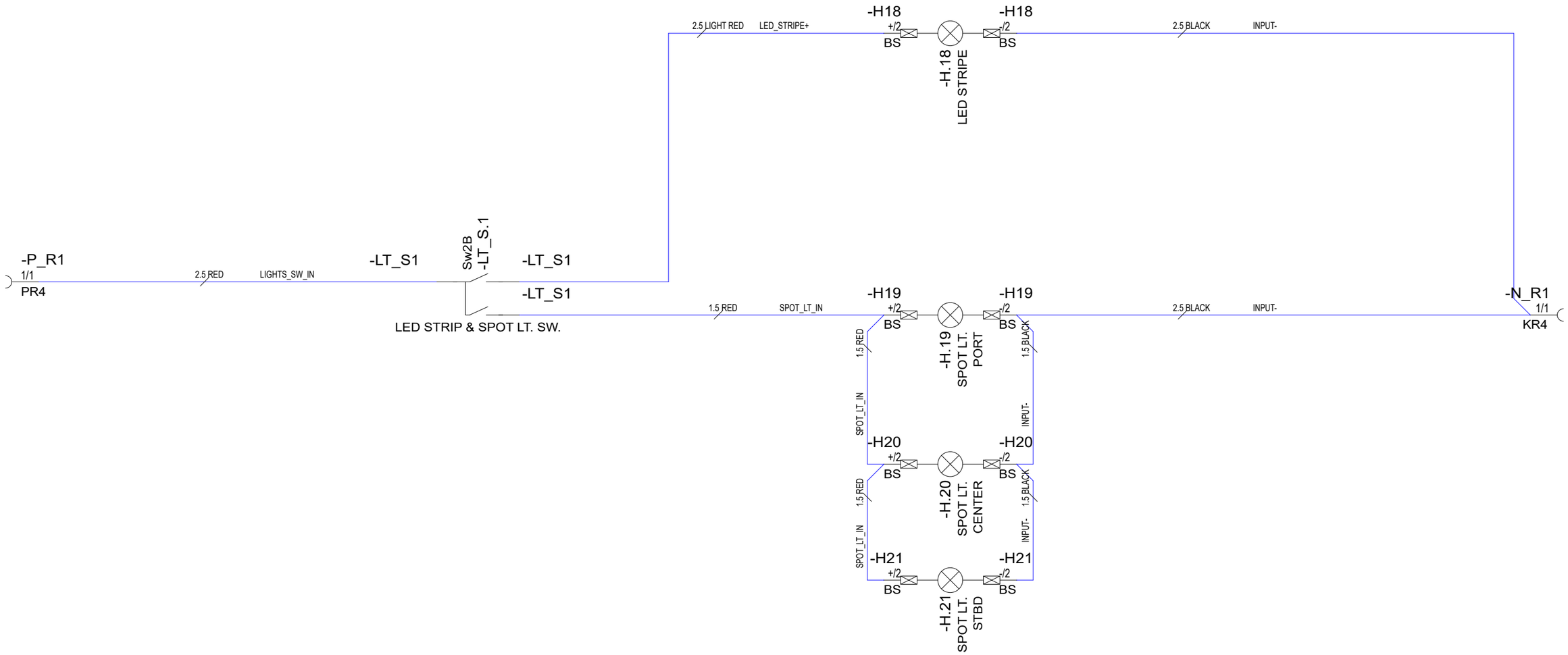

5.3.2024	PF	D7: 2005068; NOT MODIFIED	Date	3.11.2021	This document and all the information contained in it is proprietary and confidential information of Axopar Boats Oy. Neither this document nor any of the information contained herein may be reproduced, disclosed to others or used in any purpose other then for the prpose it has been provided without theprior writen permission of Axopar Boats Oy	Axopar			
02.09.2022	TT	D5: NOT MODIFIED	Drawing by	VV		Boat	Sub-product code	Product code	Project ID
16.06.2023	TT	D6: NOT MODIFIED	Sheet rev.	7	AXOPAR / BRABUS MARINE	25	DIAGRAM - SPOT & LED STRIPE LTS.	HL	9 / 47
Date of modification	Modified by	Description	Project rev.	D		Boat model	Title	Loc	Sheet

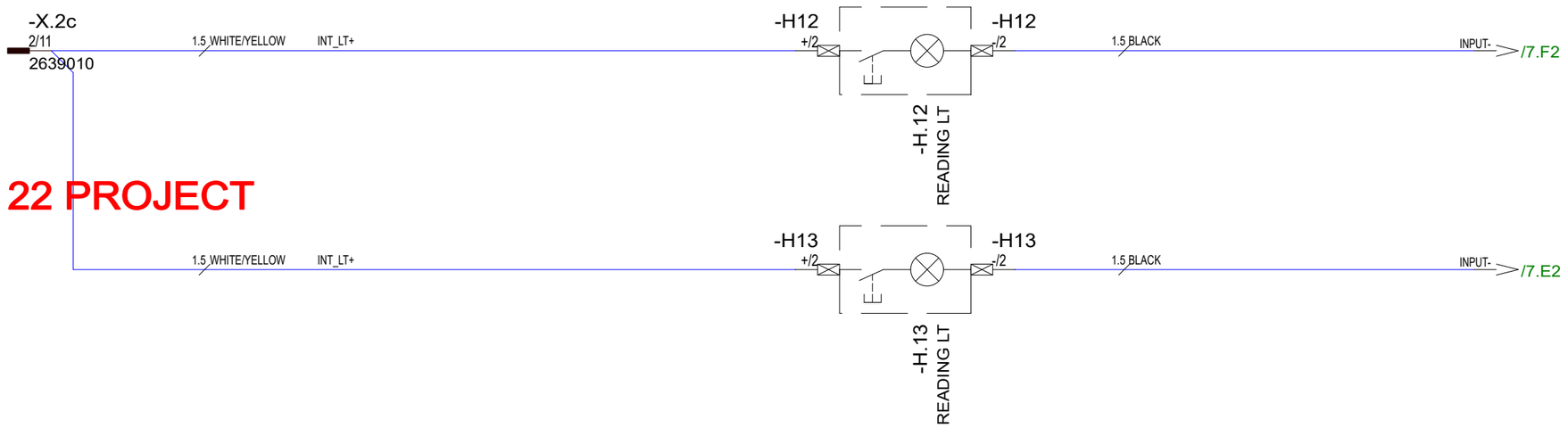

REST OF DIAGRAM
FOUNDED IN AXOPAR 22 PROJECT

12VDC

5.3.2024	PF	D7: 2005068; NOT MODIFIED	Date	11.5.2020	This document and all the information contained in it is proprietary and confidential information of Axopar Boats Oy. Neither this document nor any of the information contained herein may be reproduced, disclosed to others or used in any purpose other then for the prpose it has been provided without theprior writen permission of Axopar Boats Oy	Axopar			
02.09.2022	TT	D5: -H12 RENAMED TO READING LT; -H13 ADDED	Drawing by	TuM		Boat	Sub-product code	Product code	Project ID
16.06.2023	TT	D6: NOT MODIFIED	Sheet rev.	7	AXOPAR / BRABUS MARINE	25	DIAGRAM - INTERIOR LT	HL	10 / 47
Date of modification	Modified by	Description	Project rev.	D		Boat model	Title	Loc	Sheet

REST OF DIAGRAM
FOUNDED IN AXOPAR 22 PROJECT

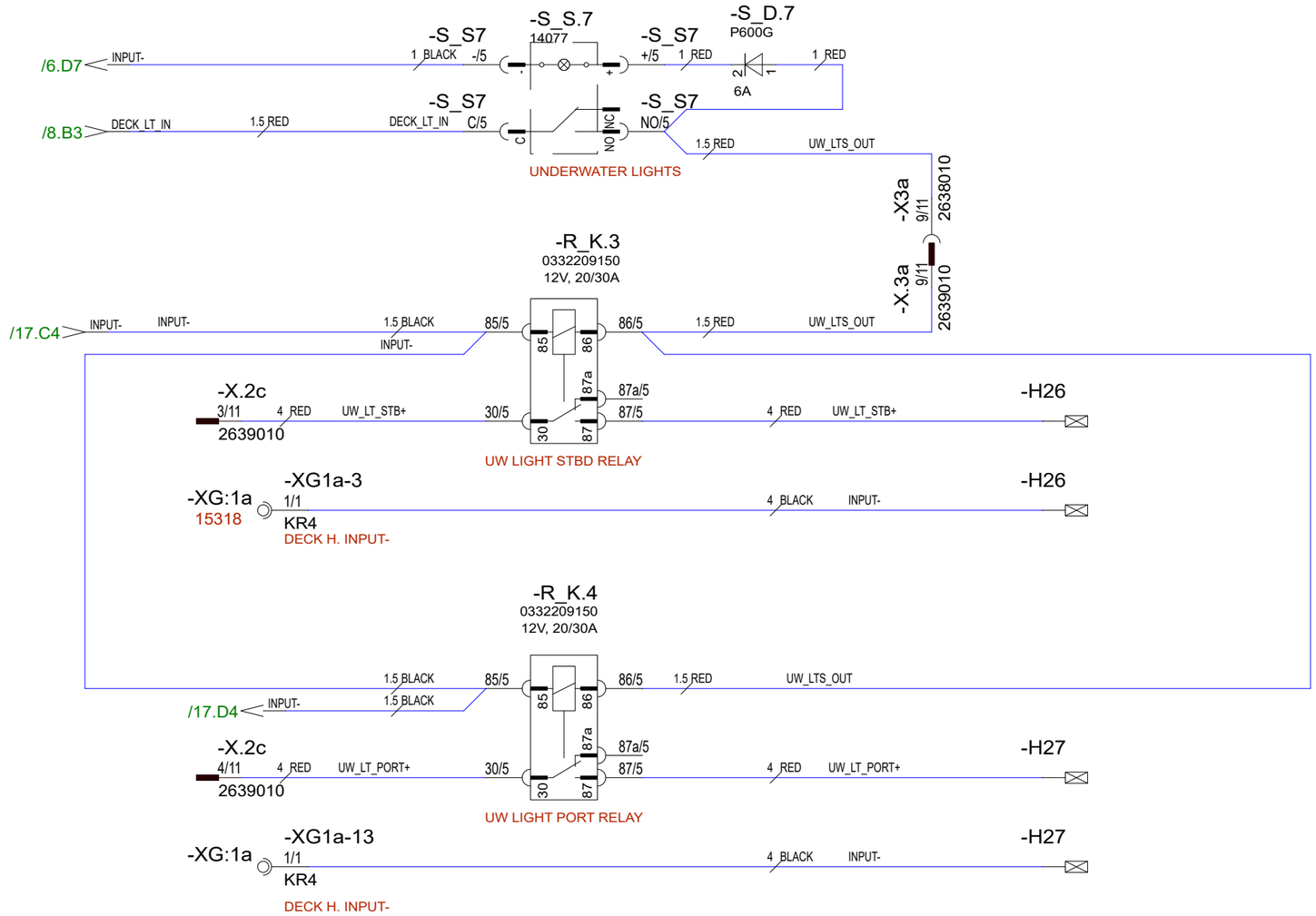

12VDC

5.3.2024	PF	D7: 2005068; NOT MODIFIED	Date	9.6.2020	This document and all the information contained in it is proprietary and confidential information of Axopar Boats Oy. Neither this document nor any of the information contained herein may be reproduced, disclosed to others or used in any purpose other then for the prpose it has been provided without theprior writen permission of Axopar Boats Oy	Axopar Boat			
02.09.2022	TT	D5: NOT MODIFIED	Drawing by	TuM			Sub-product code	Product code	Project ID
16.06.2023	TT	D6: NOT MODIFIED	Sheet rev.	7	AXOPAR / BRABUS MARINE	25 Boat model	DIAGRAM - UNDER WATER LIGHTS Title	HL Loc	11/ 47 Sheet
Date of modification	Modified by	Description	Project rev.	D					

REST OF DIAGRAM
FOUNDED IN AXOPAR 22 PROJECT

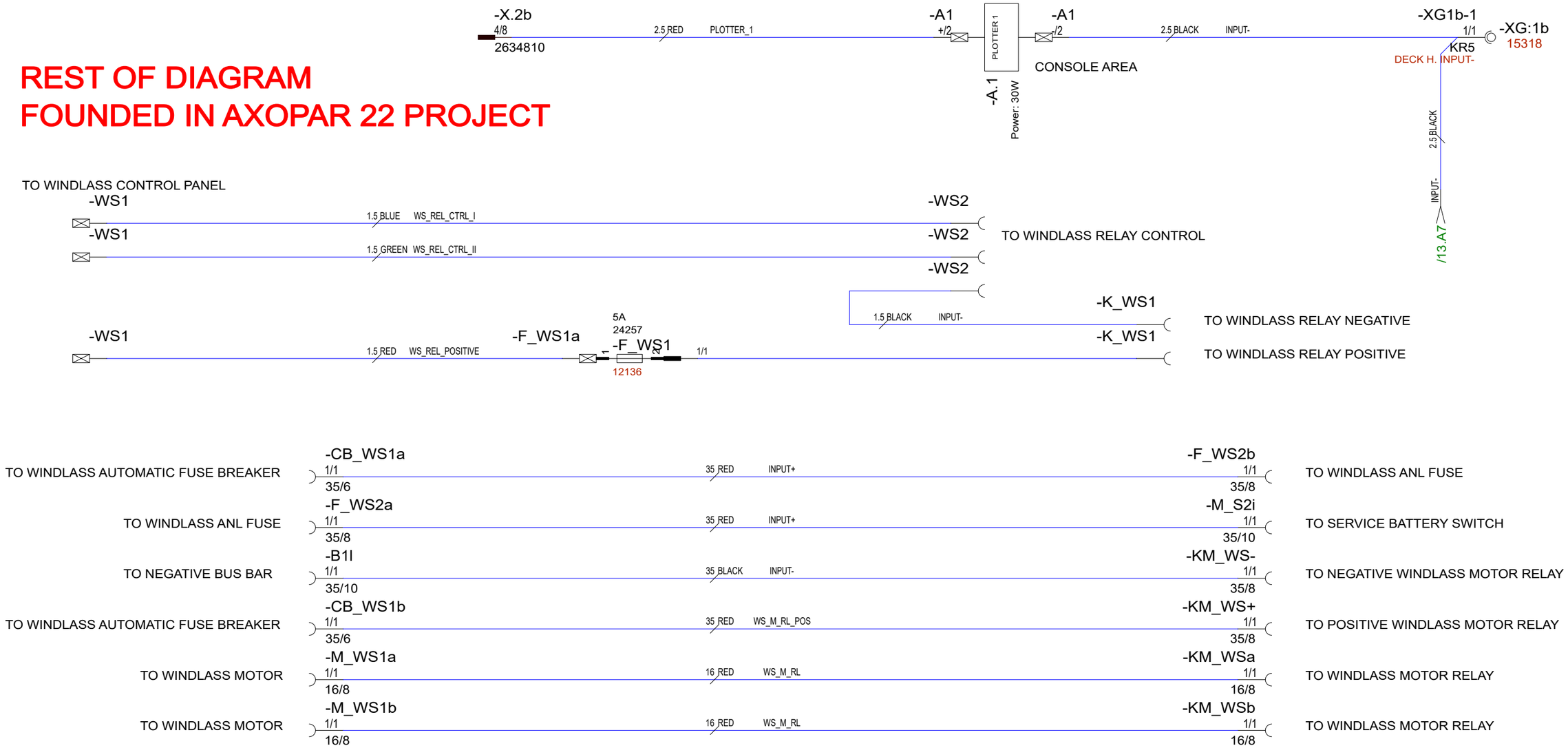

12VDC

5.3.2024	PF	D7: 2005068; NOT MODIFIED	Date	9.6.2020	This document and all the information contained in it is proprietary and confidential information of Axopar Boats Oy. Neither this document nor any of the information contained herein may be reproduced, disclosed to others or used in any purpose other then for the prpose it has been provided without theprior writen permission of Axopar Boats Oy	Axopar		
02.09.2022	TT	D5: NOT MODIFIED	Drawing by	TuM		Boat	Sub-product code	Product code / Project ID
16.06.2023	TT	D6: NOT MODIFIED	Sheet rev.	7	AXOPAR / BRABUS MARINE	25	DIAGRAM - NAV. EQ. & WINDLASS	HL
Date of modification	Modified by	Description	Project rev.	D		Boat model	Title	Loc / 12 / 47 Sheet

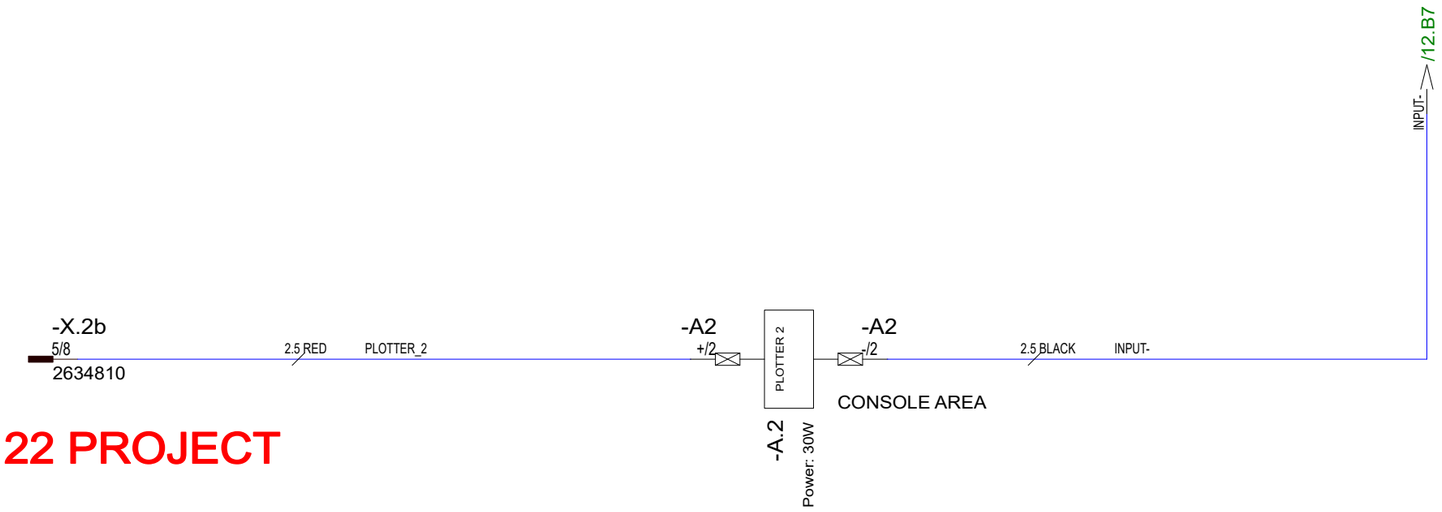

REST OF DIAGRAM
FOUNDED IN AXOPAR 22 PROJECT

12VDC

5.3.2024	PF	D7: 2005068; NOT MODIFIED	Date	9.6.2020
02.09.2022	TT	D5: NOT MODIFIED	Drawing by	TuM
16.06.2023	TT	D6: NOT MODIFIED	Sheet rev.	7
Date of modification	Modified by	Description	Project rev.	D

This document and all the information contained in it is proprietary and confidential information of Axopar Boats Oy. Neither this document nor any of the information contained herein may be reproduced, disclosed to others or used in any purpose other then for the prpose it has been provided without theprior writen permission of Axopar Boats Oy

Axopar			
Boat	Sub-product code	Product code	Project ID
25	DIAGRAM - NAVIGATION EQ.	HL	13 / 47
Boat model	Title	Loc	Sheet

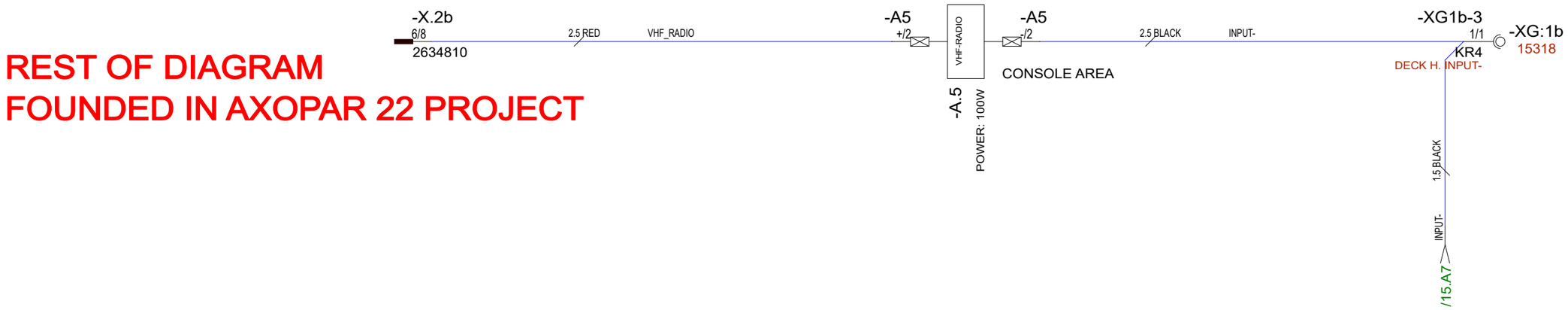

12VDC

5.3.2024	PF	D7: 2005068; NOT MODIFIED	Date	9.6.2020	This document and all the information contained in it is proprietary and confidential information of Axopar Boats Oy. Neither this document nor any of the information contained herein may be reproduced, disclosed to others or used in any purpose other then for the prpose it has been provided without theprior writen permission of Axopar Boats Oy	Axopar Boat	Sub-product code	Product code	Project ID
02.09.2022	TT	D5: NOT MODIFIED	Drawing by	TuM					
16.06.2023	TT	D6: NOT MODIFIED	Sheet rev.	7	AXOPAR / BRABUS MARINE	25 Boat model	DIAGRAM - NAVIGATION EQ. Title	HL Loc	14 / 47 Sheet
Date of modification	Modified by	Description	Project rev.	D					

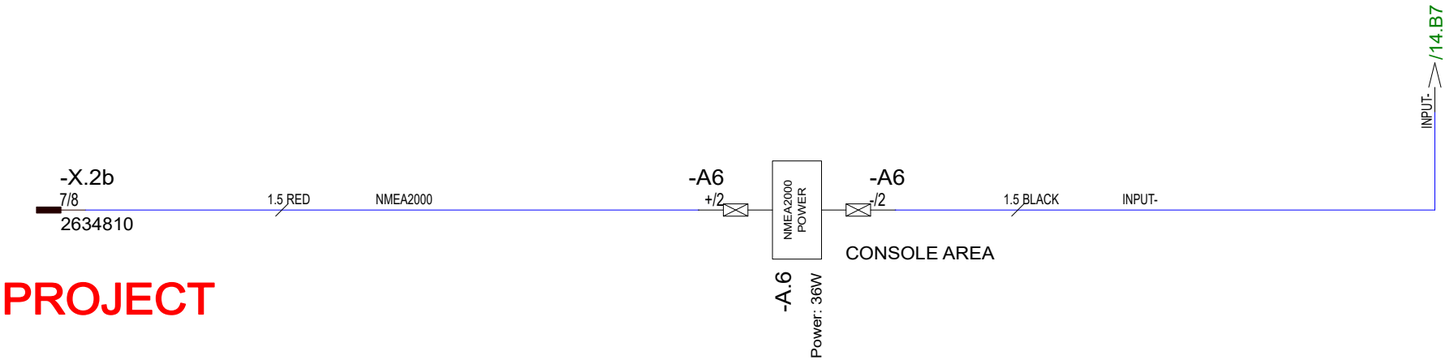

REST OF DIAGRAM
FOUNDED IN AXOPAR 22 PROJECT

12VDC

5.3.2024	PF	D7: 2005068; NOT MODIFIED	Date	9.6.2020
02.09.2022	TT	D5: NOT MODIFIED	Drawing by	TuM
16.06.2023	TT	D6: NOT MODIFIED	Sheet rev.	7
Date of modification	Modified by	Description	Project rev.	D

This document and all the information contained in it is proprietary and confidential information of Axopar Boats Oy. Neither this document nor any of the information contained herein may be reproduced, disclosed to others or used in any purpose other then for the prpose it has been provided without theprior written permission of Axopar Boats Oy

Axopar			
Boat	Sub-product code	Product code	Project ID
25	DIAGRAM - NAVIGATION EQ.	HL	15 / 47
Boat model	Title	Loc	Sheet

REST OF DIAGRAM FOUNDED IN AXOPAR 22 PROJECT

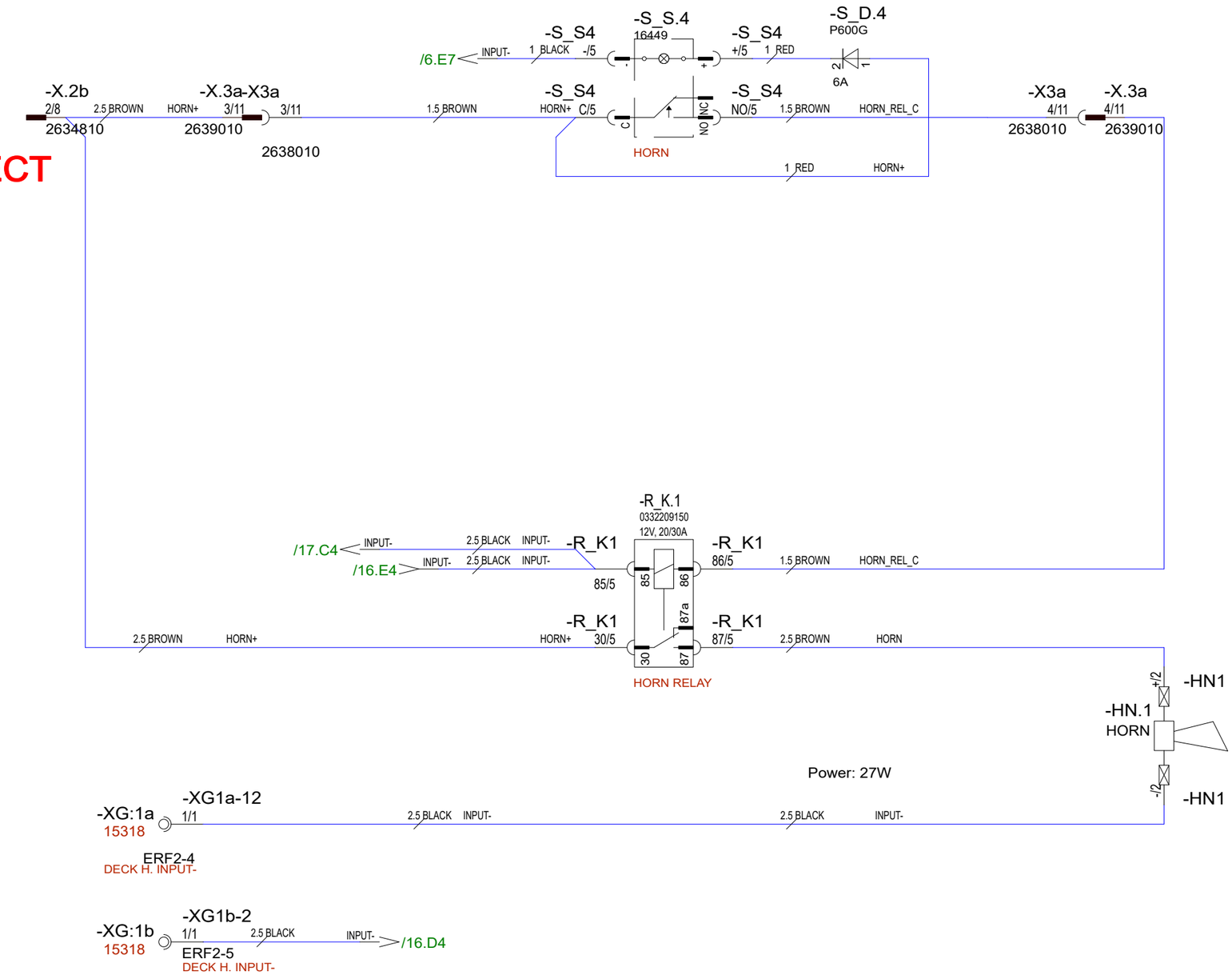

12VDC

5.3.2024	PF	D7: 2005068; NOT MODIFIED	Date	9.6.2020	This document and all the information contained in it is proprietary and confidential information of Axopar Boats Oy. Neither this document nor any of the information contained herein may be reproduced, disclosed to others or used in any purpose other then for the prpose it has been provided without theprior writen permission of Axopar Boats Oy	Axopar			
02.09.2022	TT	D5: NOT MODIFIED	Drawing by	TuM		Boat	Sub-product code	Product code	Project ID
16.06.2023	TT	D6: NOT MODIFIED	Sheet rev.	7	AXOPAR / BRABUS MARINE	25	DIAGRAM - HORN	HL	16 / 47
Date of modification	Modified by	Description	Project rev.	D		Boat model	Title	Loc	Sheet

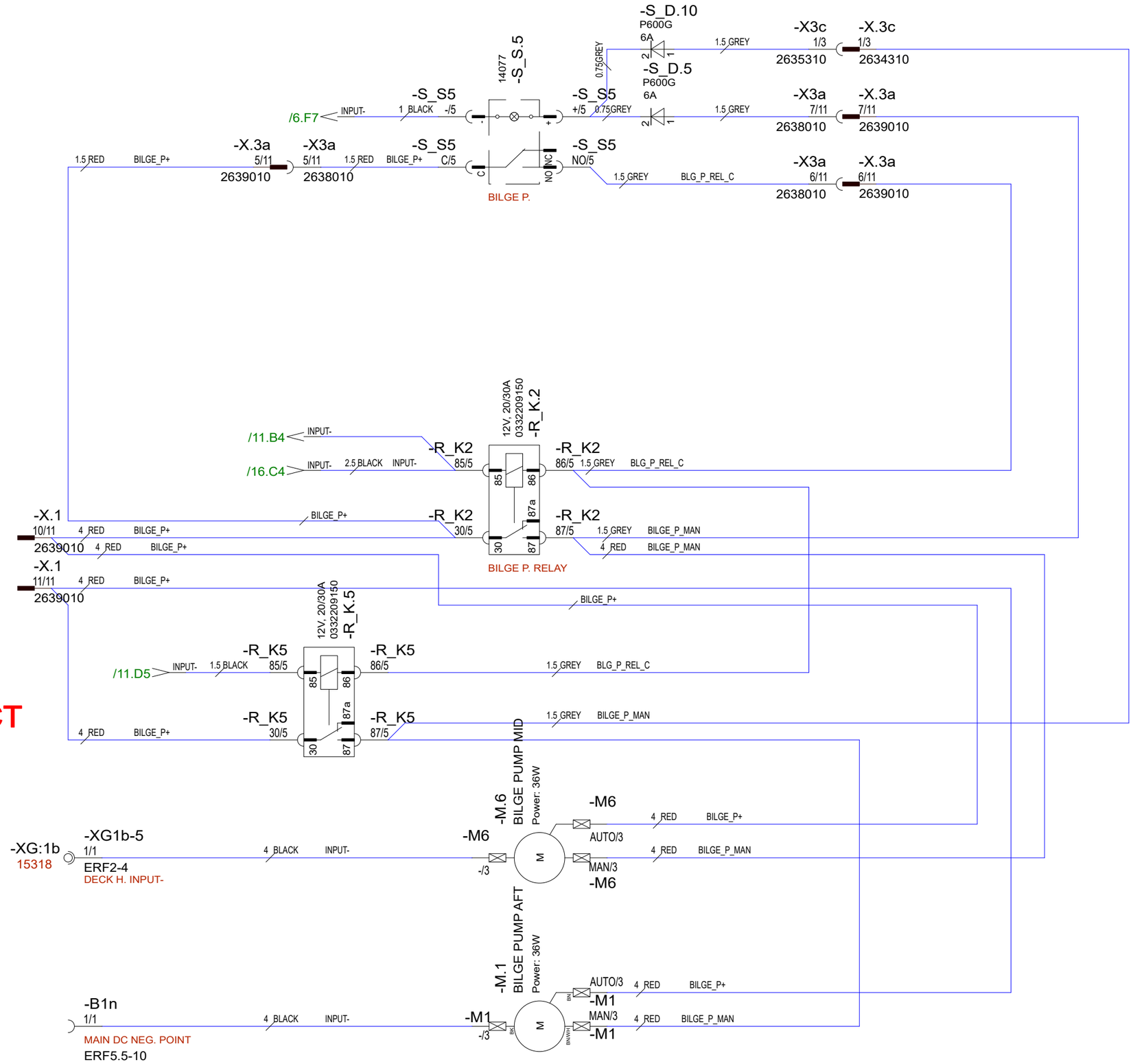

REST OF DIAGRAM
FOUNDED IN AXOPAR 22 PROJECT

12VDC

5.3.2024	PF	D7:2005068;(D_F2), R_K5, X3c, S_D.10, BP connections changed	Date	9.6.2020	This document and all the information contained in it is proprietary and confidential information of Axopar Boats Oy. Neither this document nor any of the information contained herein may be reproduced, disclosed to others or used in any purpose other then for the prpose it has been provided without theprior writen permission of Axopar Boats Oy	Axopar		
02.09.2022	TT	D5: NOT MODIFIED	Drawing by	TuM		Boat	Sub-product code	Product code / Project ID
16.06.2023	TT	D6: NOT MODIFIED	Sheet rev.	7	AXOPAR / BRABUS MARINE	25	DIAGRAM - BILGE PUMP	HL
Date of modification	Modified by	Description	Project rev.	D		Boat model	Title	Loc / Sheet 17 / 47

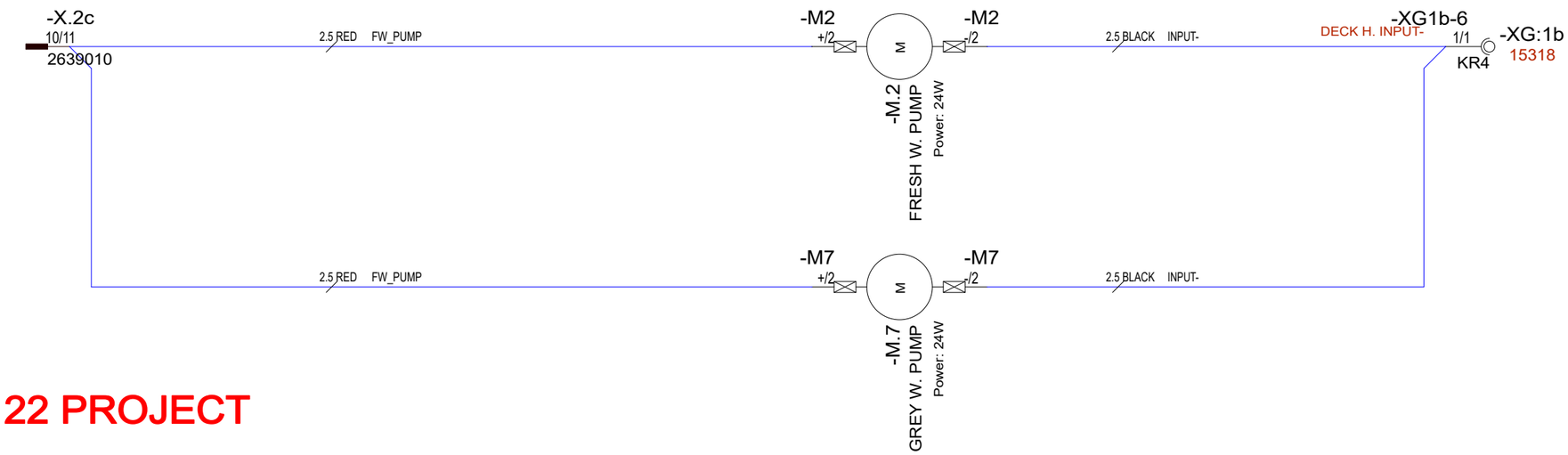

REST OF DIAGRAM
FOUNDED IN AXOPAR 22 PROJECT

12VDC

5.3.2024	PF	D7: 2005068; NOT MODIFIED	Date	9.6.2020
02.09.2022	TT	D5: NOT MODIFIED	Drawing by	TuM
16.06.2023	TT	D6: NOT MODIFIED	Sheet rev.	7
Date of modification	Modified by	Description	Project rev.	D

This document and all the information contained in it is proprietary and confidential information of Axopar Boats Oy. Neither this document nor any of the information contained herein may be reproduced, disclosed to others or used in any purpose other then for the prpose it has been provided without theprior writen permission of Axopar Boats Oy

Axopar			
Boat	Sub-product code	Product code	Project ID
25	DIAGRAM - FRESH W. PUMP	HL	18 / 47
Boat model	Title	Loc	Sheet

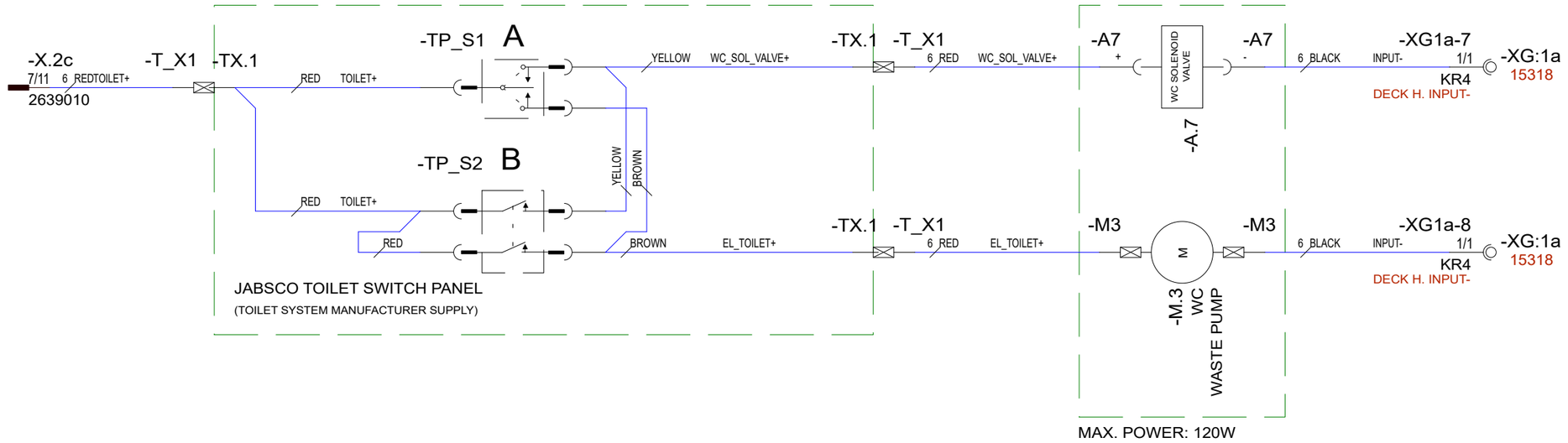

REST OF DIAGRAM
FOUNDED IN AXOPAR 22 PROJECT

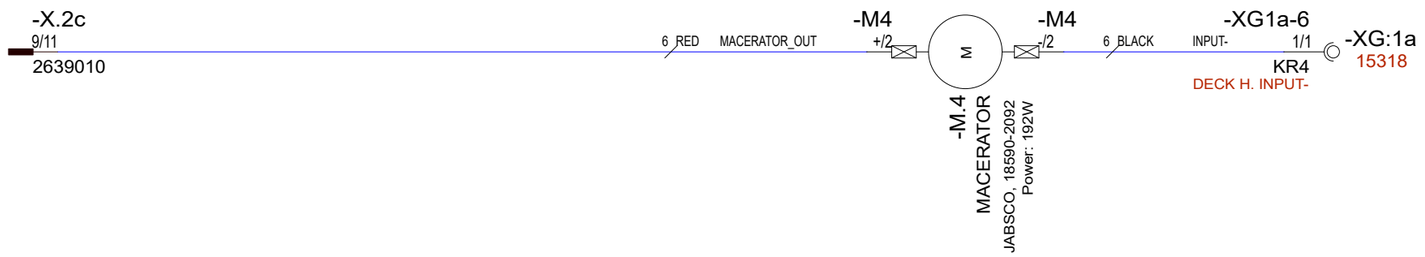

12VDC

5.3.2024	PF	D7: 2005068; NOT MODIFIED	Date	10.6.2020	This document and all the information contained in it is proprietary and confidential information of Axopar Boats Oy. Neither this document nor any of the information contained herein may be reproduced, disclosed to others or used in any purpose other then for the prpose it has been provided without theprior writen permission of Axopar Boats Oy	Axopar			
02.09.2022	TT	D5: -M3&-T_X1 CONNECTORS CHANGED	Drawing by	TuM		Boat	Sub-product code	Product code	Project ID
16.06.2023	TT	D6: NOT MODIFIED	Sheet rev.	7	AXOPAR / BRABUS MARINE	25	DIAGRAM - TOILET/MACERATOR	HL	19 / 47
Date of modification	Modified by	Description	Project rev.	D		Boat model	Title	Loc	Sheet

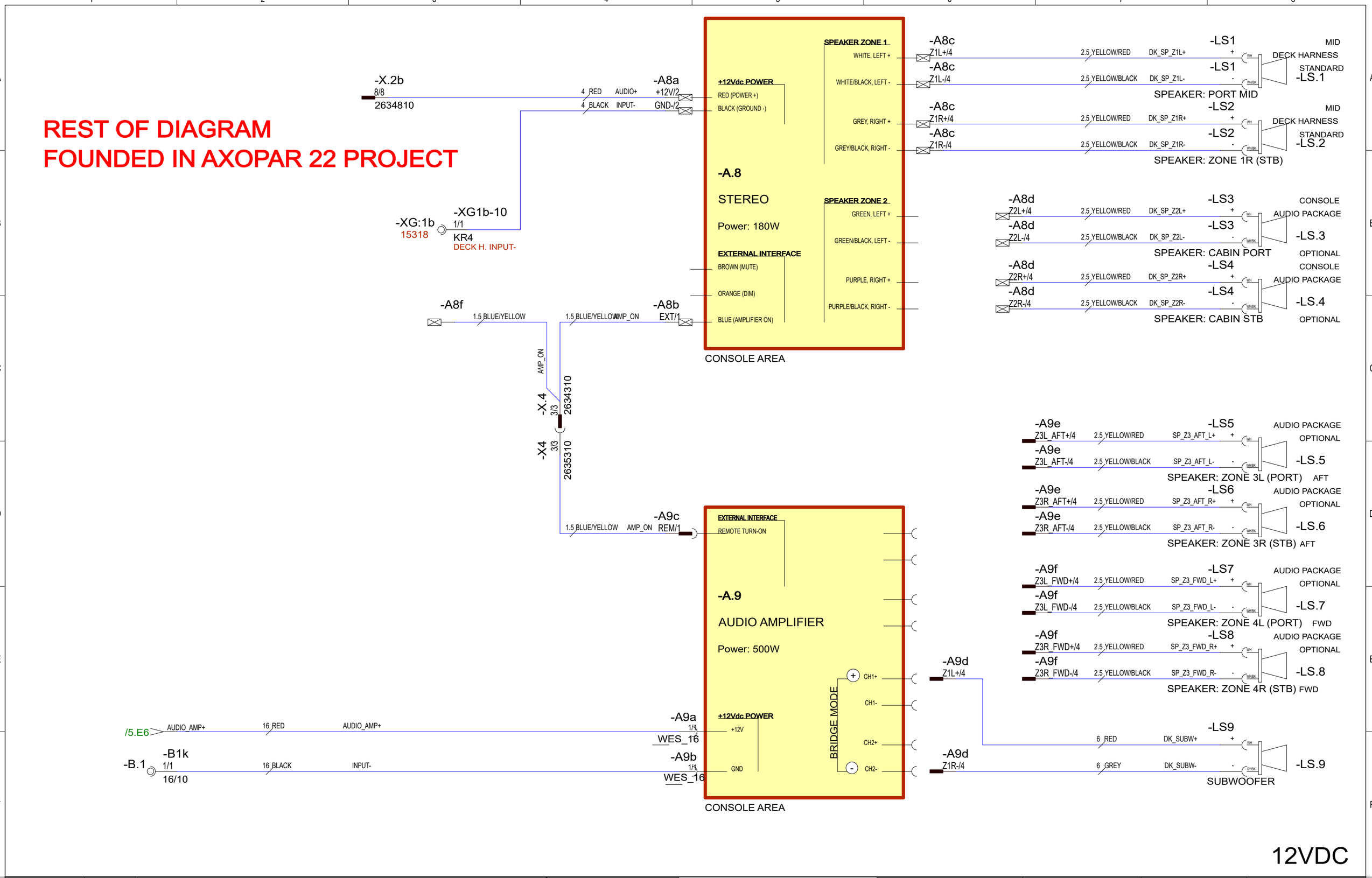

5.3.2024	PF	D7: 2005068; NOT MODIFIED	Date	10.6.2020	This document and all the information contained in it is proprietary and confidential information of Axopar Boats Oy. Neither this document nor any of the information contained herein may be reproduced, disclosed to others or used in any purpose other then for the prpose it has been provided without theprior writen permission of Axopar Boats Oy	Axopar		
02.09.2022	TT	D5: -A8f ADDED	Drawing by	TuM		Boat	Sub-product code	Product code	Project ID
16.06.2023	TT	D6: NOT MODIFIED	Sheet rev.	7	AXOPAR / BRABUS MARINE	25	DIAGRAM - AUDIO SYSTEM	HL	20 / 47
Date of modification	Modified by	Description	Project rev.	D		Boat model	Title	Loc	Sheet

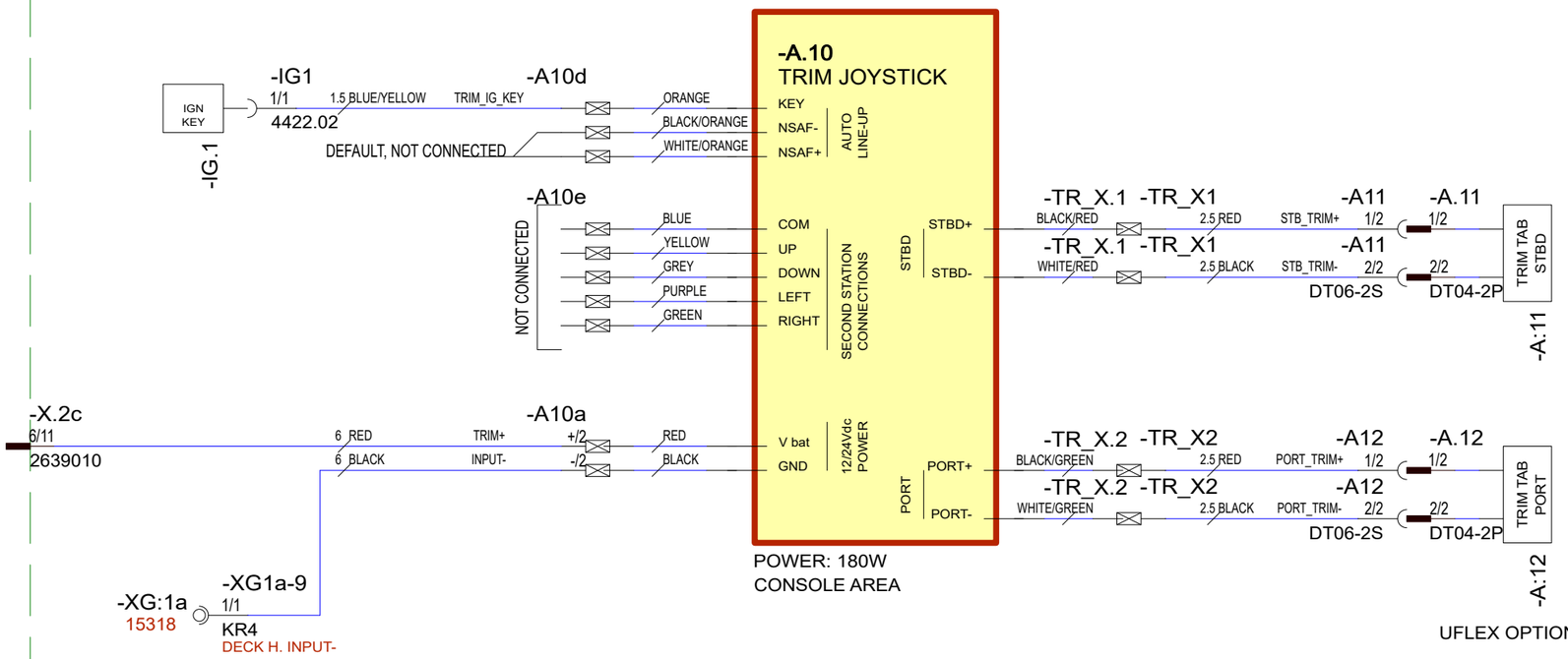

REST OF DIAGRAM
FOUNDED IN AXOPAR 22 PROJECT

12VDC

5.3.2024	PF	D7: 2005068; NOT MODIFIED	Date	11.5.2020
02.09.2022	TT	D5: -TR_X1&-TR_X2 CONNECTORS CHANGED	Drawing by	TuM
16.06.2023	TT	D6: NOT MODIFIED	Sheet rev.	7
Date of modification	Modified by	Description	Project rev.	D

This document and all the information contained in it is proprietary and confidential information of Axopar Boats Oy. Neither this document nor any of the information contained herein may be reproduced, disclosed to others or used in any purpose other then for the prpose it has been provided without theprior writen permission of Axopar Boats Oy

Axopar			
Boat	Sub-product code	Product code	Project ID
25	DIAGRAM - TRIM SYSTEM	HL	21/ 47
Boat model	Title	Loc	Sheet

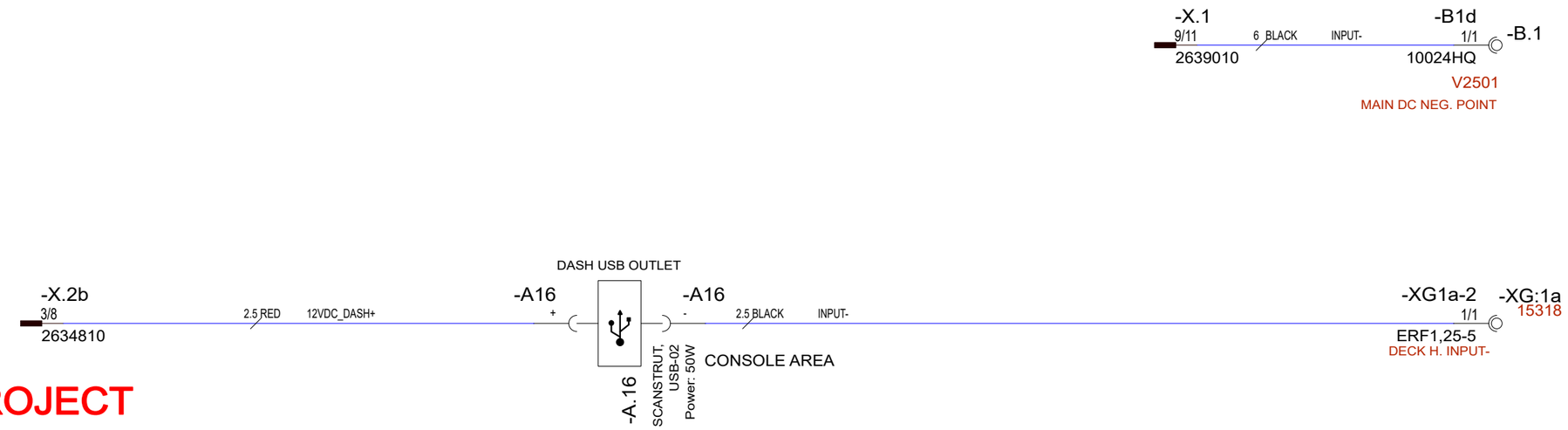

REST OF DIAGRAM
FOUNDED IN AXOPAR 22 PROJECT

12VDC

5.3.2024	PF	D7: 2005068; NOT MODIFIED	Date	9.6.2020	This document and all the information contained in it is proprietary and confidential information of Axopar Boats Oy. Neither this document nor any of the information contained herein may be reproduced, disclosed to others or used in any purpose other then for the prpose it has been provided without theprior writen permission of Axopar Boats Oy	Axopar Boat	Sub-product code	Product code	Project ID
02.09.2022	TT	D5: NOT MODIFIED	Drawing by	TuM					
16.06.2023	TT	D6: NOT MODIFIED	Sheet rev.	7		25 Boat model	DIAGRAM - 12Vdc SOCKETS Title	HL Loc	22 / 47 Sheet
Date of modification	Modified by	Description	Project rev.	D					

REST OF DIAGRAM
FOUNDED IN AXOPAR 22 PROJECT

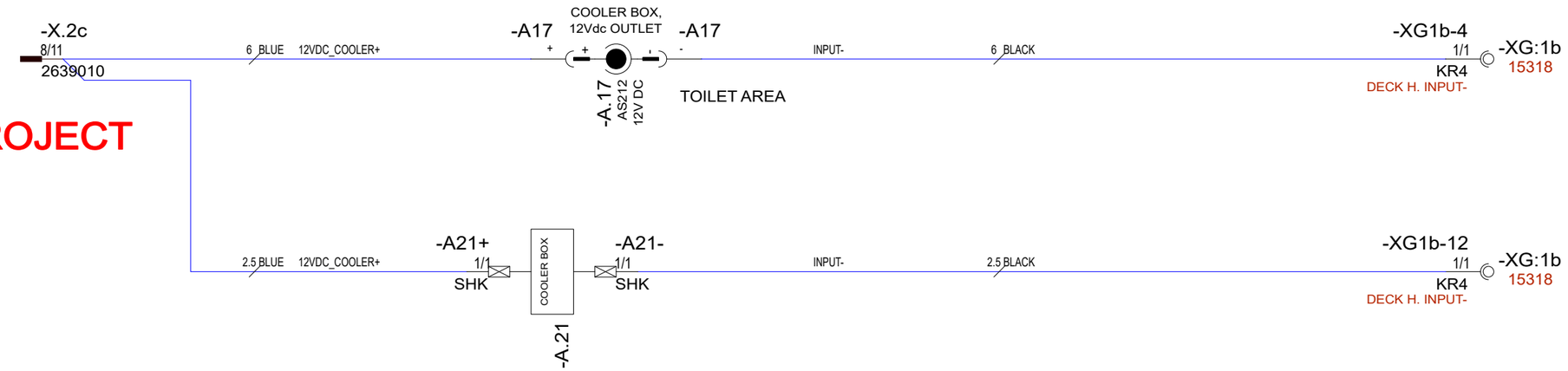

12VDC

5.3.2024	PF	D7: 2005068; NOT MODIFIED	Date	9.6.2020
02.09.2022	TT	D5: NOT MODIFIED	Drawing by	TuM
16.06.2023	TT	D6: NOT MODIFIED	Sheet rev.	7
Date of modification	Modified by	Description	Project rev.	D

This document and all the information contained in it is proprietary and confidential information of Axopar Boats Oy. Neither this document nor any of the information contained herein may be reproduced, disclosed to others or used in any purpose other then for the prpose it has been provided without theprior writen permission of Axopar Boats Oy

Axopar Boat	Sub-product code	Product code	Project ID
25 Boat model	DIAGRAM - 12Vdc SOCKETS Title	HL Loc	23 / 47 Sheet

REST OF DIAGRAM
FOUNDED IN AXOPAR 22 PROJECT

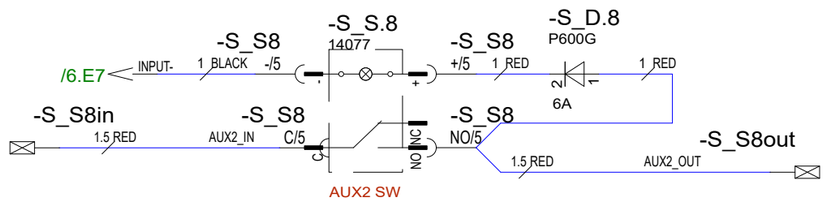

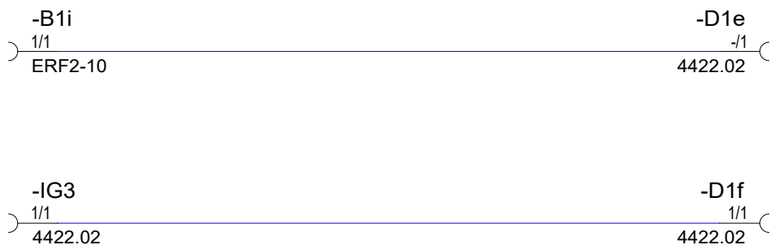

12VDC

5.3.2024	PF	D7: 2005068; NOT MODIFIED	Date 10.6.2020	This document and all the information contained in it is proprietary and confidential information of Axopar Boats Oy. Neither this document nor any of the information contained herein may be reproduced, disclosed to others or used in any purpose other then for the prpose it has been provided without theprior writen permission of Axopar Boats Oy	Axopar			
02.09.2022	TT	D5: NOT MODIFIED	Drawing by TuM		Boat	Sub-product code	Product code	Project ID
16.06.2023	TT	D6: NOT MODIFIED	Sheet rev. 7		25	DIAGRAM - AUX	HL	24 / 47
Date of modification	Modified by	Description	Project rev. D		Boat model	Title	Loc	Sheet

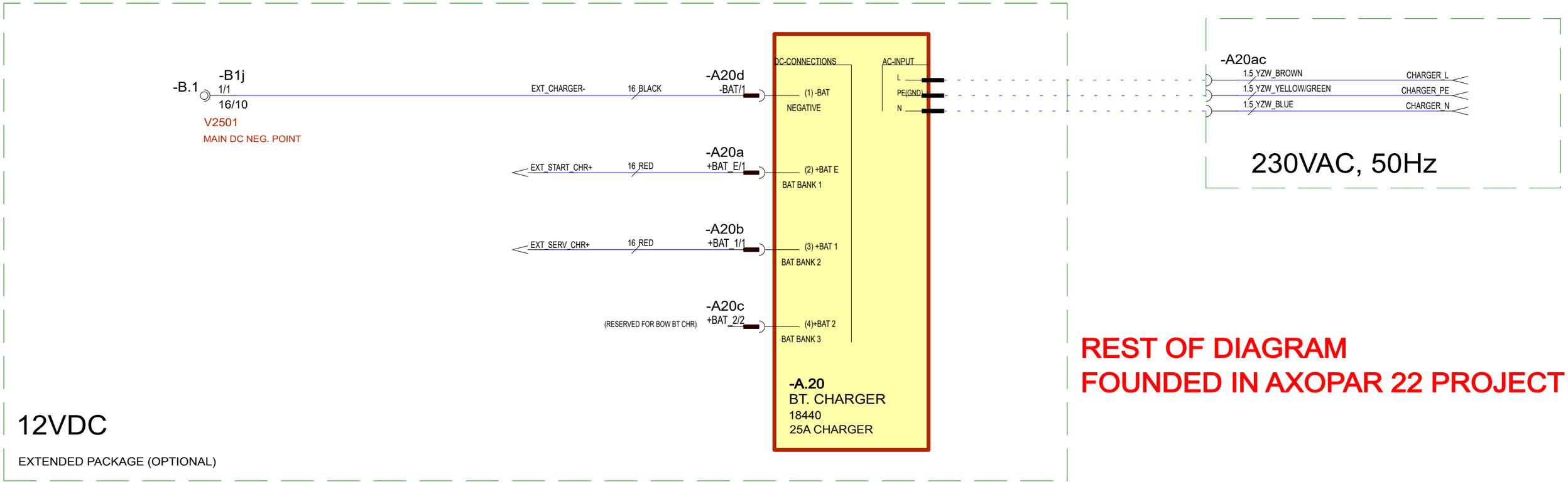

REST OF DIAGRAM
FOUNDED IN AXOPAR 22 PROJECT

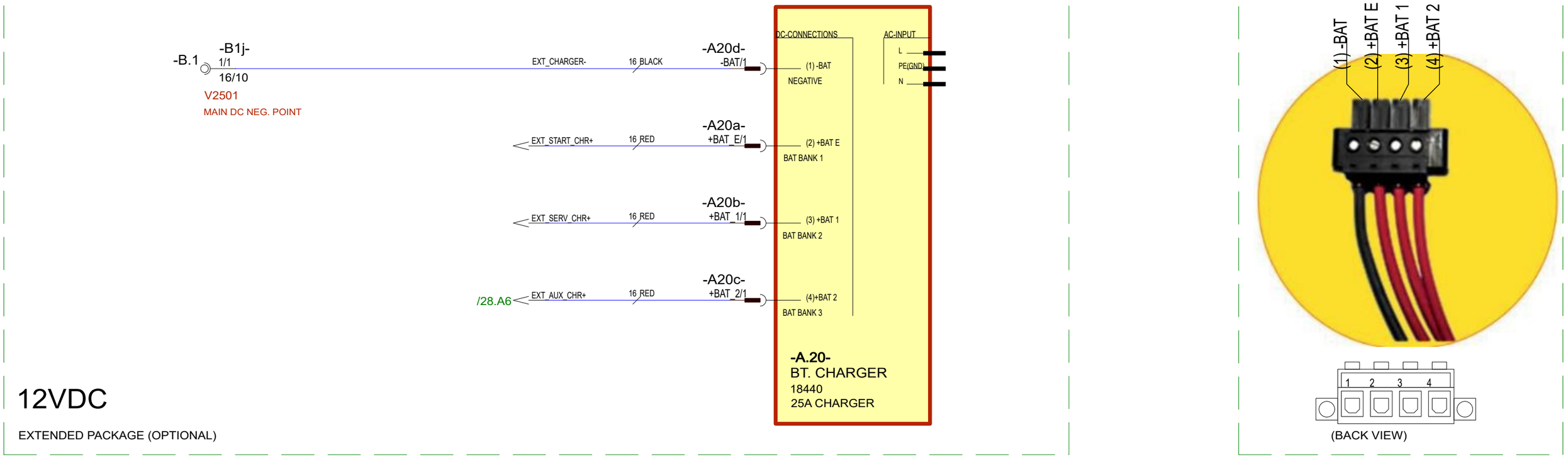

5.3.2024	PF	D7: 2005068; NOT MODIFIED	Date	16.6.2020	This document and all the information contained in it is proprietary and confidential information of Axopar Boats Oy. Neither this document nor any of the information contained herein may be reproduced, disclosed to others or used in any purpose other then for the prpose it has been provided without theprior writen permission of Axopar Boats Oy	Axopar		
02.09.2022	TT	D5: NOT MODIFIED	Drawing by	TuM		Boat	Sub-product code	Product code	Project ID
16.06.2023	TT	D6: NOT MODIFIED	Sheet rev.	7	AXOPAR / BRABUS MARINE	25	DIAGRAM - CHARGER	HL	25 / 47
Date of modification	Modified by	Description	Project rev.	D		Boat model	Title	Loc	Sheet

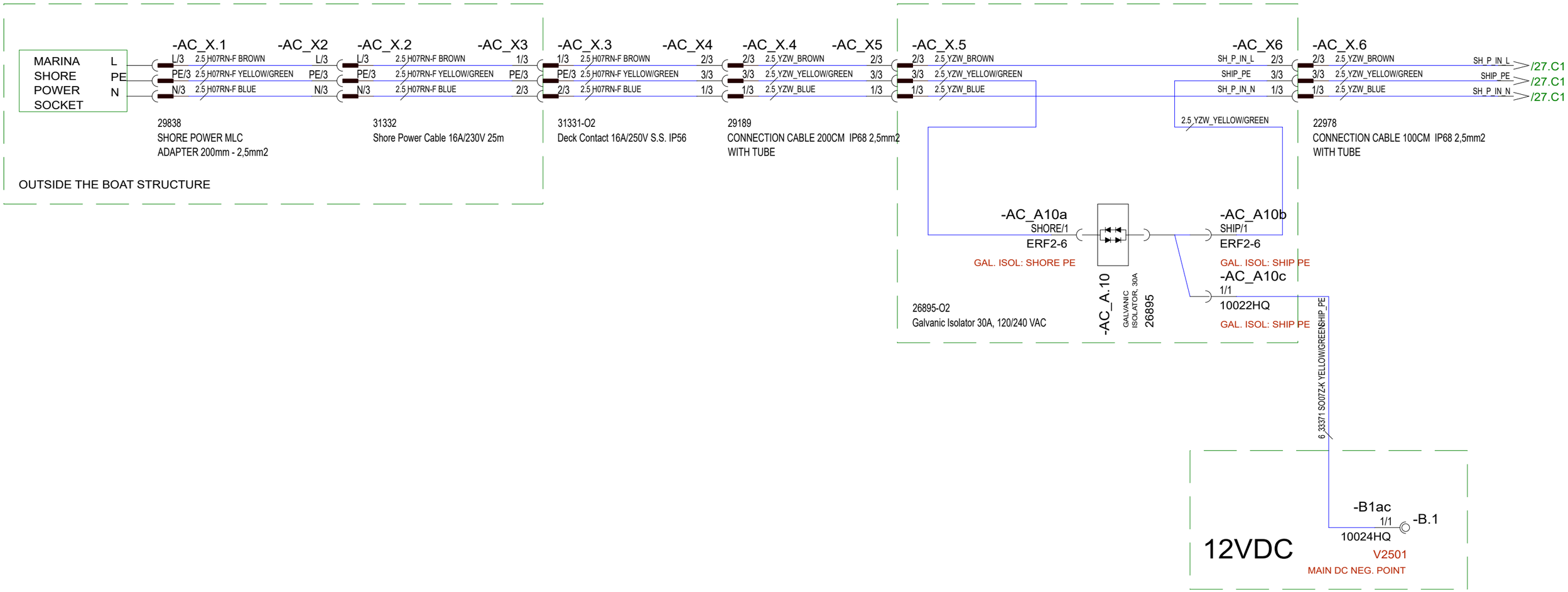

230VAC, 50Hz

5.3.2024	PF	D7: 2005068; NOT MODIFIED	Date	10.11.2021	This document and all the information contained in it is proprietary and confidential information of Axopar Boats Oy. Neither this document nor any of the information contained herein may be reproduced, disclosed to others or used in any purpose other then for the prpose it has been provided without theprior writen permission of Axopar Boats Oy	Axopar			
02.09.2022	TT	D5: NOT MODIFIED	Drawing by	TuM		Boat	Sub-product code	Product code	Project ID
16.06.2023	TT	D6: NOT MODIFIED	Sheet rev.	7		22	DIAGRAM - 230VAC SYSTEM	HL	26 / 47
Date of modification	Modified by	Description	Project rev.	D		Boat model	Title	Loc	Sheet

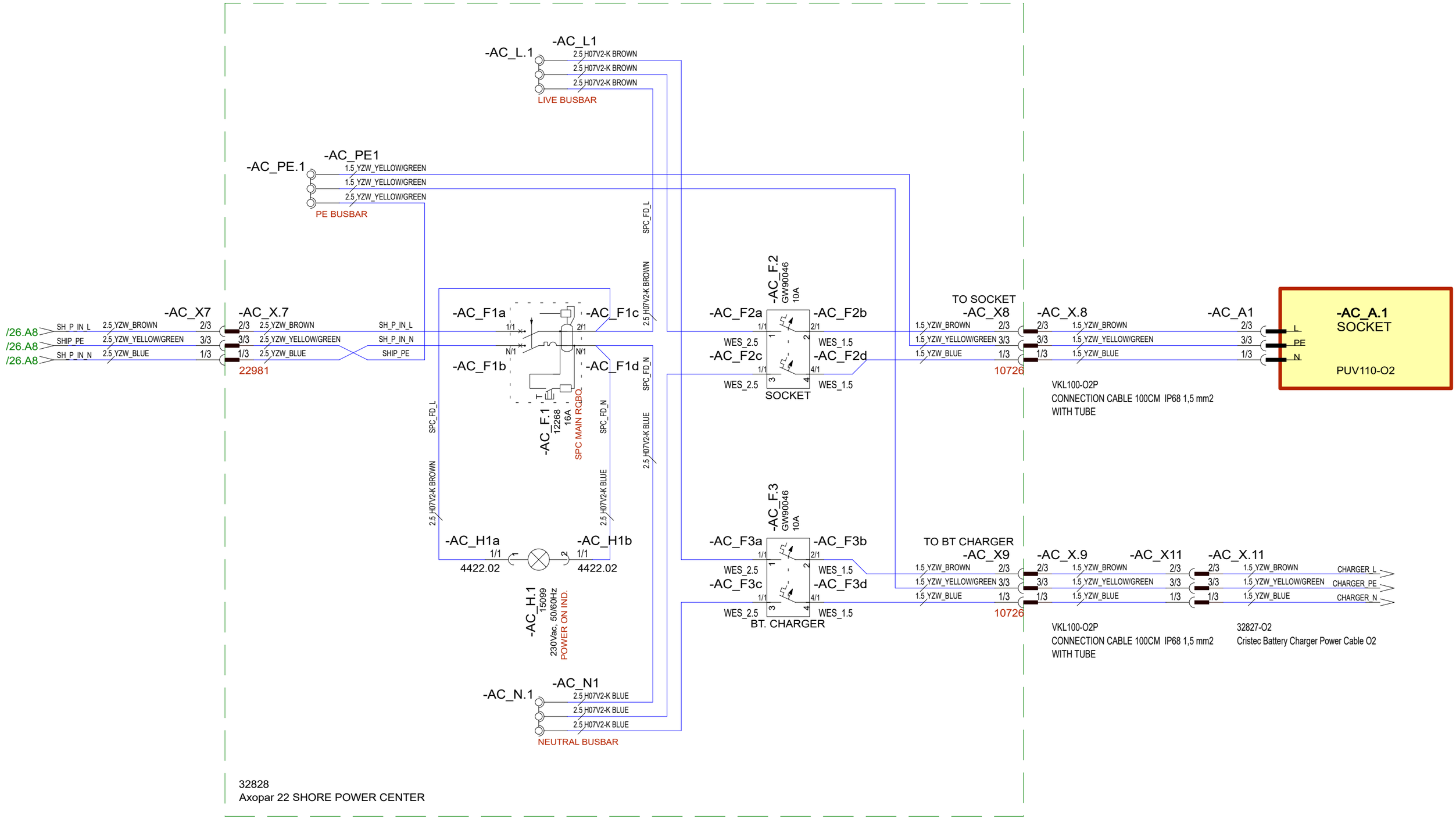

230VAC, 50Hz

5.3.2024	PF	D7: 2005068; NOT MODIFIED	Date	10.11.2021	This document and all the information contained in it is proprietary and confidential information of Axopar Boats Oy. Neither this document nor any of the information contained herein may be reproduced, disclosed to others or used in any purpose other then for the prpose it has been provided without theprior writen permission of Axopar Boats Oy	Axopar			
02.09.2022	TT	D5: NOT MODIFIED	Drawing by	TuM		Boat	Sub-product code	Product code	Project ID
16.06.2023	TT	D6: NOT MODIFIED	Sheet rev.	7	AXOPAR / BRABUS MARINE	22	DIAGRAM - 230VAC SYSTEM	HL	27 / 47
Date of modification	Modified by	Description	Project rev.	D		Boat model	Title	Loc	Sheet

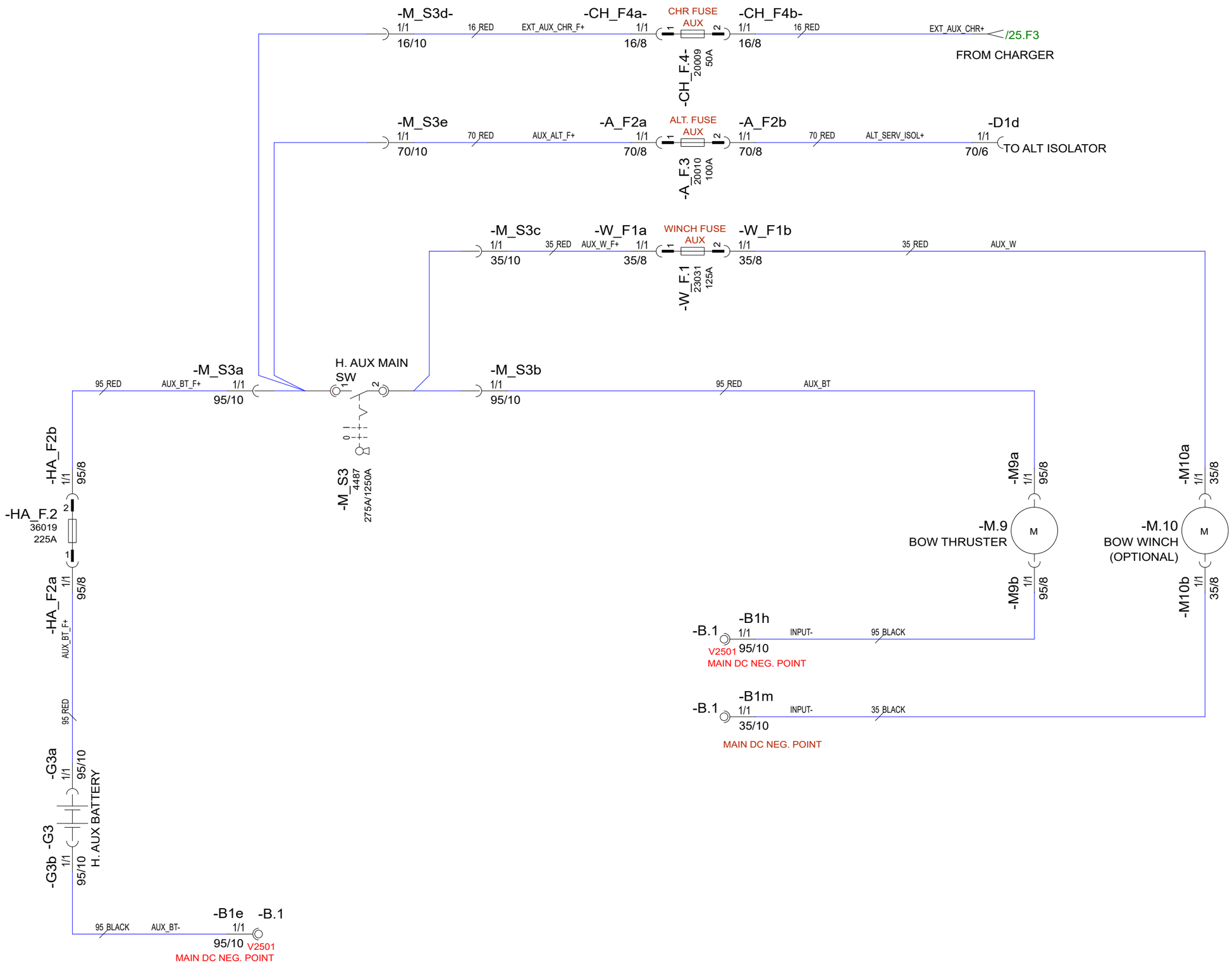

5.3.2024	PF	D7: 2005068; NOT MODIFIED	Date	13.09.2022	This document and all the information contained in it is proprietary and confidential information of Axopar Boats Oy. Neither this document nor any of the information contained herein may be reproduced, disclosed to others or used in any purpose other then for the prpose it has been provided without theprior writen permission of Axopar Boats Oy	Axopar		
13.09.2022	TT	D5: INTRODUCED DRAWING	Drawing by	TT		Boat	Sub-product code	Product code / Project ID
16.06.2023	TT	D6: NOT MODIFIED	Sheet rev.	7	AXOPAR / BRABUS MARINE	25	DIAGRAM - BOW THRUSTER/WINCH	HL
Date of modification	Modified by	Description	Project rev.	D		Boat model	Title	Loc / 28 / 47 Sheet

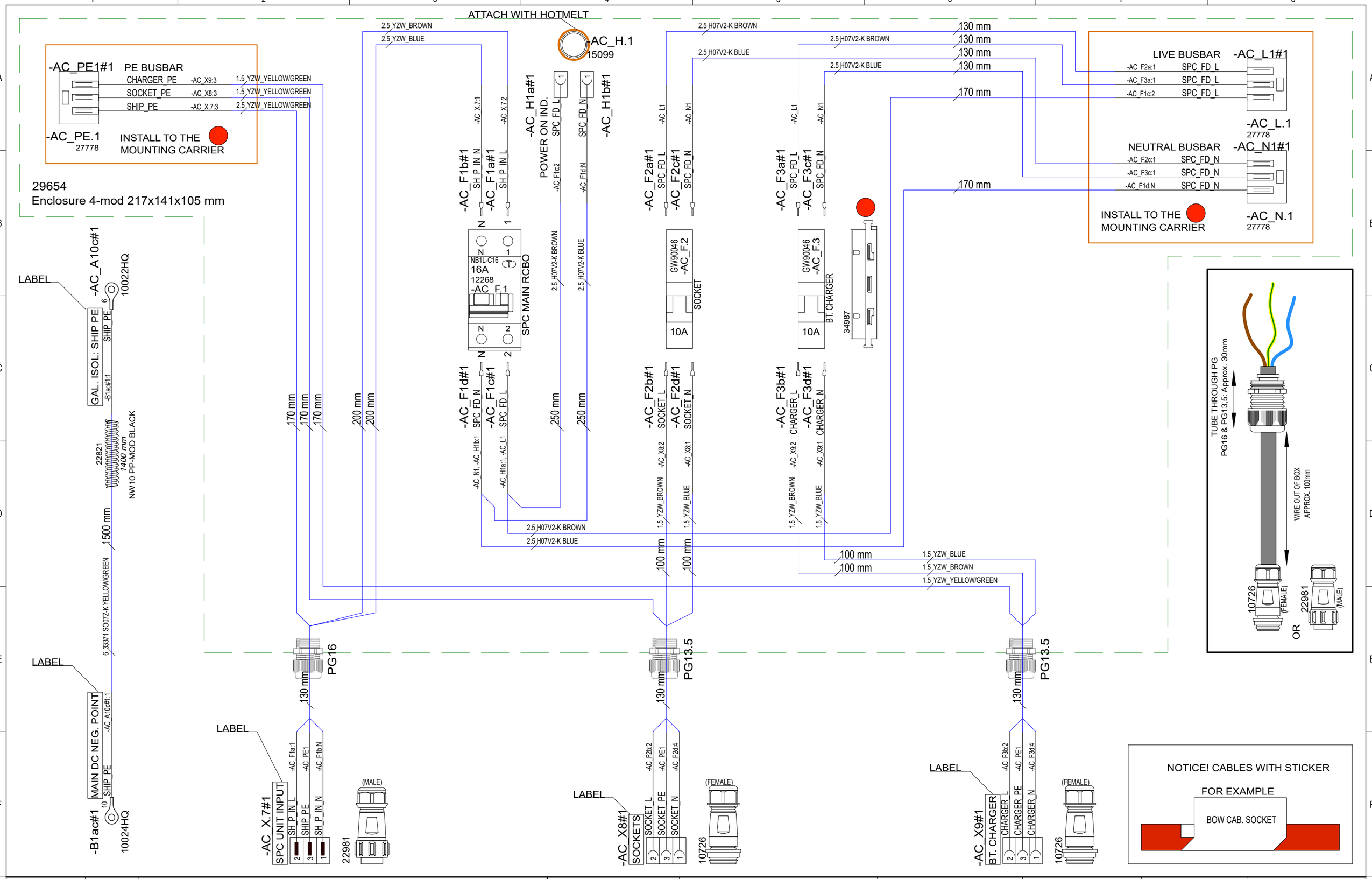

8.7.2020	TuM	A1: INTRODUCED DRAWING.	Date 10.11.2021	NAVIX.	Axopar		
10.11.2021	VV	B2: PRODUCT CHANGED TO AXOPAR 25.	Drawing by TuM		Boat	Sub-product code	32828 Product code	Project ID
06.09.2022	TT	D3: MAIN NEG. POINT CABLE CHANGED	Sheet rev. 3		25	SHORE POWER UNIT - EURO	HL	29 / 47
Date of modification	Modified by	Description	Project rev. D	Copyright by	Boat model	Title	Loc	Sheet

DRILLING HOLES

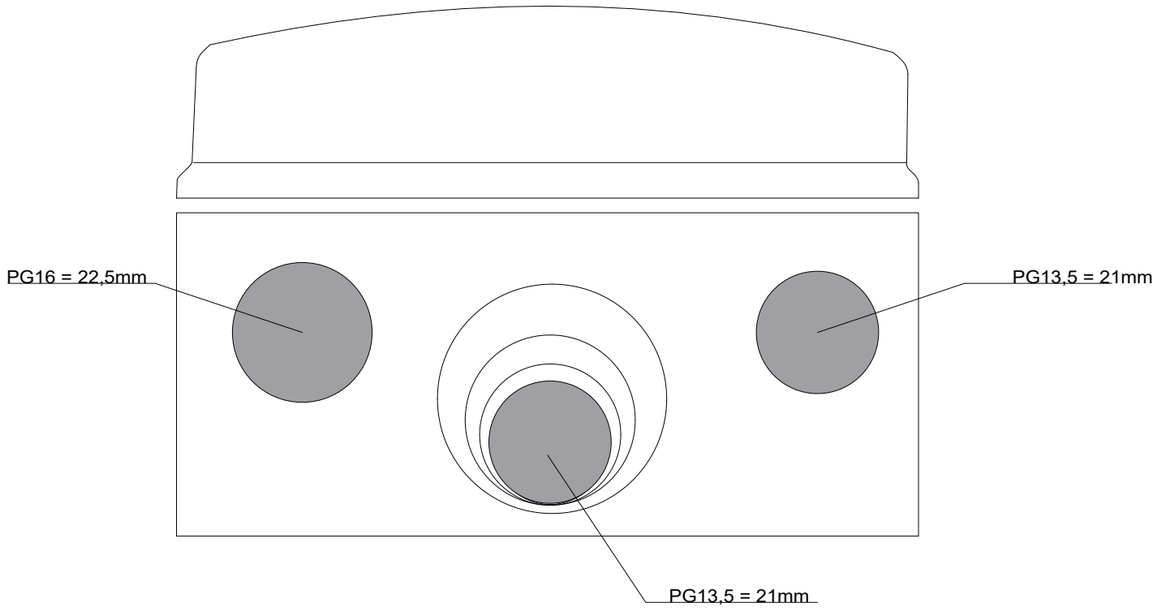

LABEL

CUT UNNECESSARY LABEL

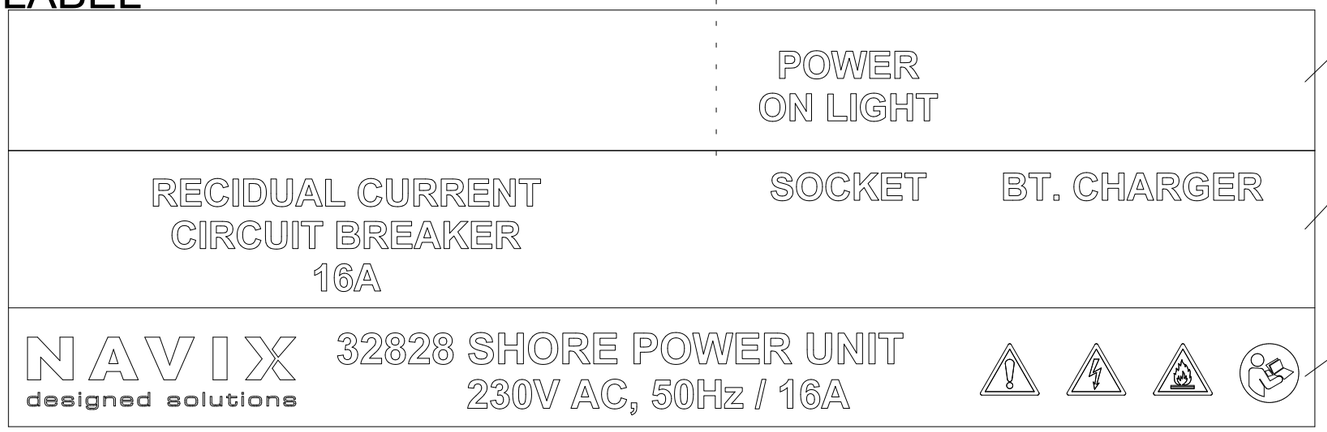

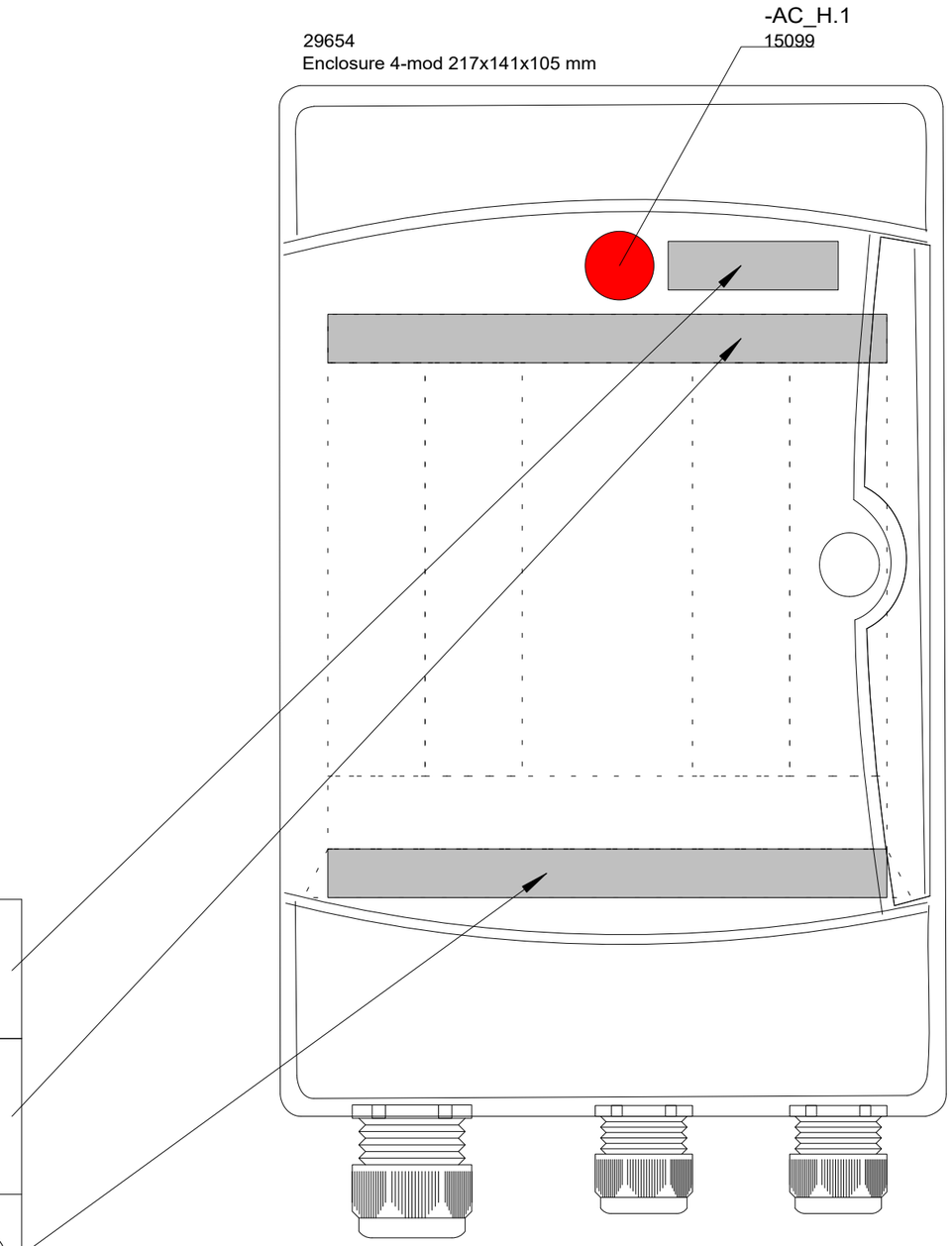

8.7.2020	TuM	A1: INTRODUCED DRAWING.	Date	10.11.2021	NAVIX.	Axopar		32828	
10.11.2021	VV	B2: PRODUCT CHANGED TO AXOPAR 25.	Drawing by	TuM		Boat	Sub-product code	Product code	Project ID
06.09.2022	TT	D3: MAIN NEG. POINT CABLE LENGHT CHANGED	Sheet rev.	3		25	SHORE POWER UNIT - EURO	HL	30 / 47
Date of modification	Modified by	Description	Project rev.	D	Copyright by	Boat model	Title	Loc	Sheet

SPC TARKASTUSPÖYTÄKIRJA
SPC INSPECTION SHEET

TUOTE TARRA /
PRODUCT LABEL

* PPKKVV-JÄRJESTYSNUMERO / DDMMYY-RUNNING NUMBER (Esim. 11. maaliskuuta 2013 tehty tuote on sarjanumeroltaan 110313-01, seuraava on 110313-02 jne.)

SARJANUMERO* / SERIAL NUMBER*						
JOHDOT KIINNI OIKEIN / CORRECT CONNECTIONS						
MAADOITUS TULEVAT JA LÄHTEVÄT / GROUND CONNECTION IN AND OUT						
VVS JA TOTSIT I-ASENNOSSA / RCBO AND CIRCUIT BREAKERS IN I-POSITION						
ERISTYSVASTUS (mA) max lukema ** / ISOLATION RESISTOR (mA) max **						
MAAPIIRI 10A (Ohm) max lukema ** / GROUND CIRCUIT 10A (Ohm) max **						
TOIMINNALLINEN JA VVS TESTAUS / FUNCTIONAL AND RCBO TEST						
SARJANUMERO TARRA / SERIAL NUMBER STICKER						
PVM / DATE						
TESTASI / TESTED BY						

Tehty CENELEC EN 50106 mukaan / Made according to CENELEC EN 50106

**ERISTYSVASTUS JA MAAPIIRI TESTATTAVA JOKAISEEN SISÄÄNTULOON JA ULOSMENOON / ISOLATION RESISTOR AND GROUND CIRCUIT SHOULD BE TESTED FOR EVERY IN AND OUT

RAJA-ARVOT / LIMITS:

ERISTYSVASTUS / ISOLATING RESISTOR 1000V = <20mA

MAAPIIRI / GROUND CIRCUIT 10A = <0,2 Ohm

Date of modification	Modified by	Description
8.7.2020	TuM	A1: INRODUCED DRAWING.
10.11.2021	VV	B2: PRODUCT CHANGED TO AXOPAR 25.
06.09.2022	TT	D3: MAIN NEG. POINT CABLE LENGHT CHANGED

Date	10.11.2021
Drawing by	TuM
Sheet rev.	3
Project rev.	D

NAVIX.
Copyright by

Axopar Boat		32828 Product code	Project ID
25 Boat model	SHORE POWER UNIT - EURO Title	HL Loc	31/ 47 Sheet

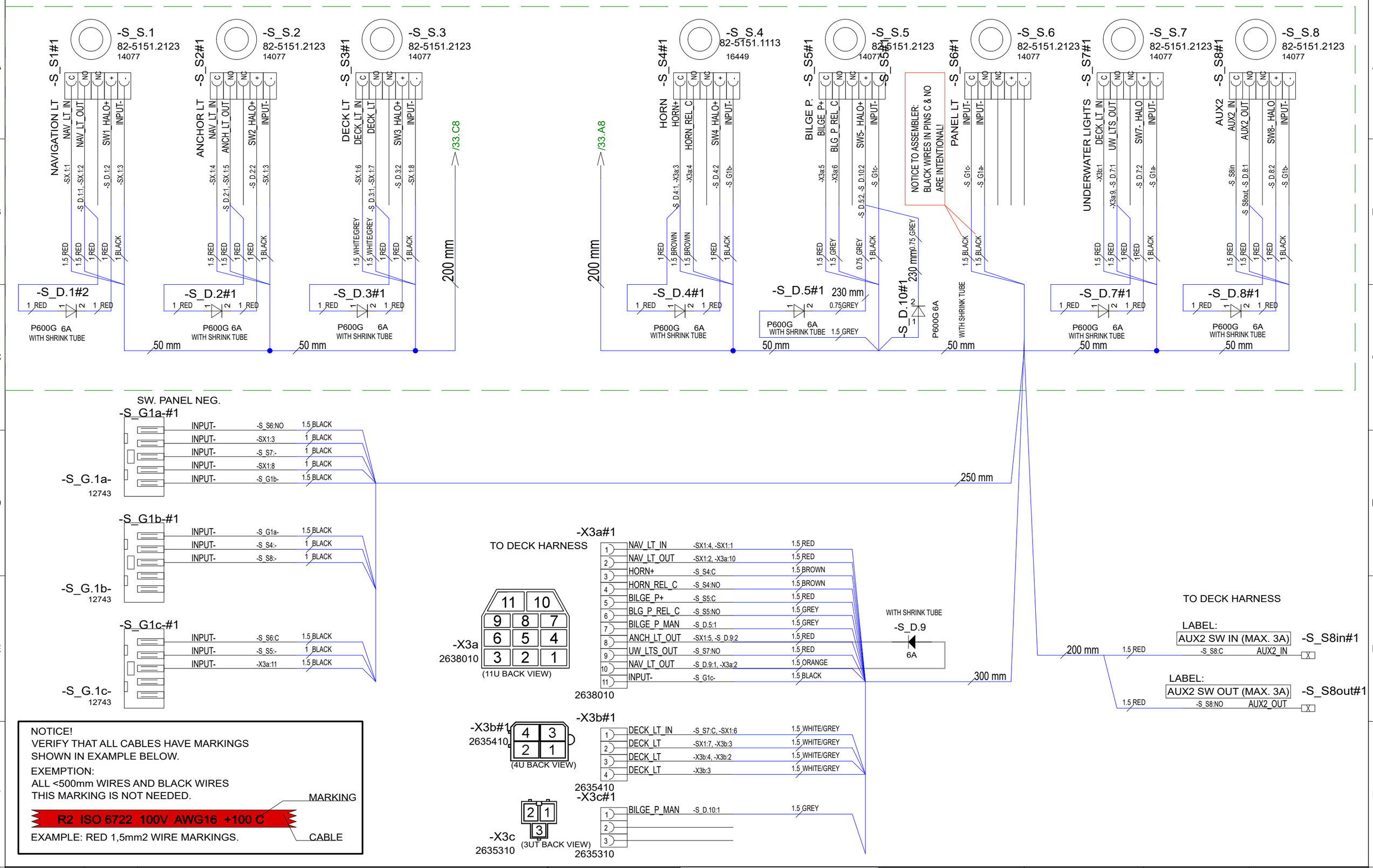

NOTICE!
VERIFY THAT ALL CABLES HAVE MARKINGS
SHOWN IN EXAMPLE BELOW.
EXEMPTION:
ALL <500mm WIRES AND BLACK WIRES
THIS MARKING IS NOT NEEDED.

R2 ISO 6722 100V AWG16 +100 C

MARKING
CABLE

EXAMPLE: RED 1,5mm2 WIRE MARKINGS.

Date of modification	Modified by	Description
06.09.2022	TT	D3: NOT MODIFIED. REVISION CHANGED
5.3.2024	PF	D4:2005068;S_D.10 added
14.04.2022	RP	C3: SX1,SX.1 ADDED; S_S7in, S_S7out REMOVED; X3a/9 ADDED

Date	21.06.2021
Drawing by	TT
Sheet rev.	4
Project rev.	D

This document and all the information contained in it is proprietary and confidential information of Axopar Boats Oy. Neither this document nor any of the information contained herein may be reproduced, disclosed to others or used in any purpose other then for the prpose it has been provided without theprior writen permission of Axopar Boats Oy

Axopar	SEE EXP VIEW	35165	
Boat	Sub-product code	Product code	Project ID
25	SWITCH PANEL	HL	32 / 47
Boat model	Title	Loc	Sheet

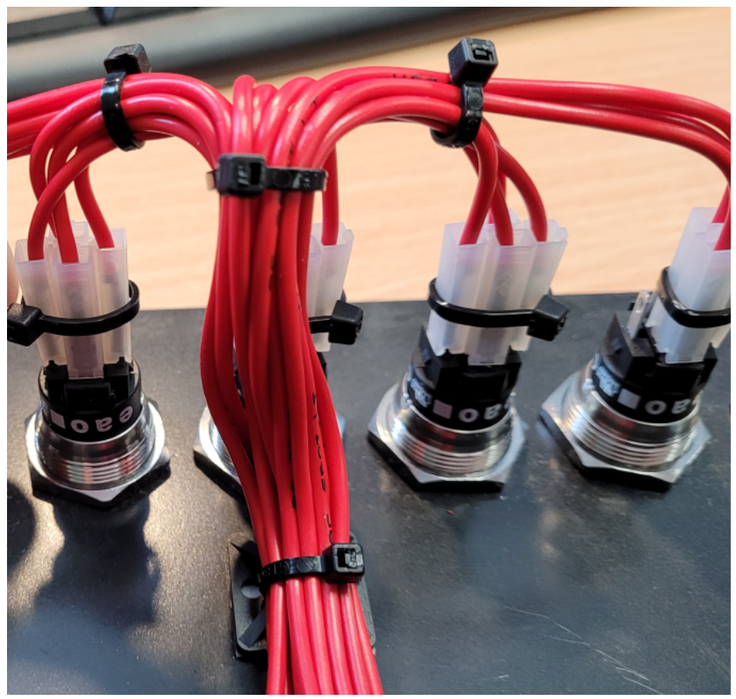

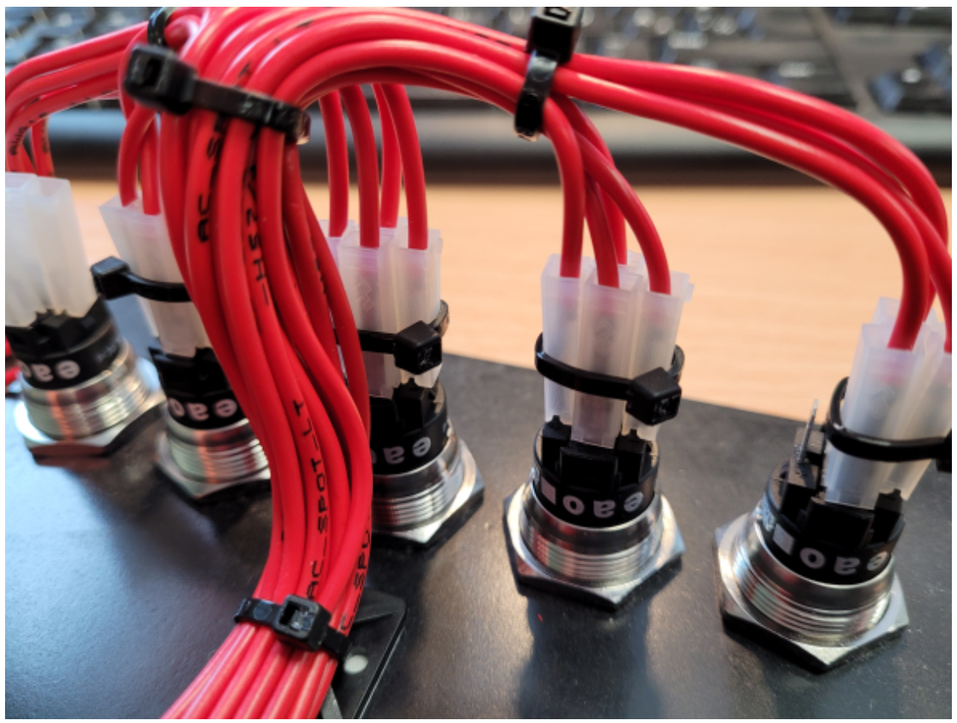

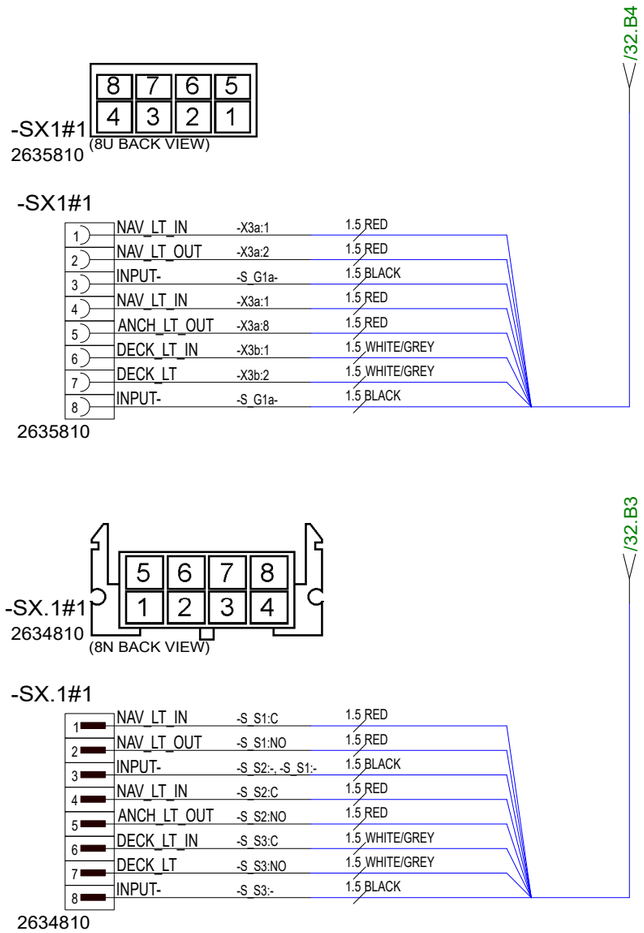

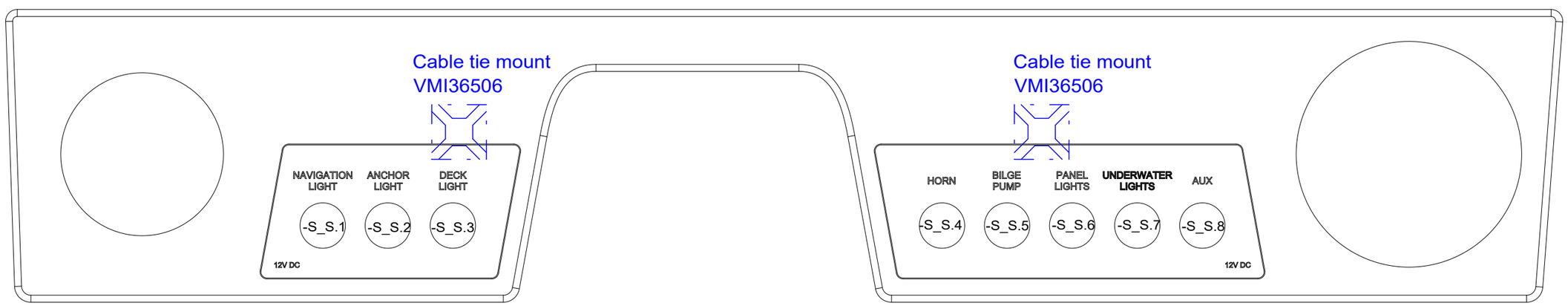

1. Install the Cable Tie Mounts on the back of the panel, using double-sided tape attached. As in the pictures. (Clean the panel surface first.)

2. Attach the harness to the mount with the cable tie.
3. Make sure that the wires coming from the switches are not tight!

Date of modification	Modified by	Description
06.09.2022	TT	D3: NOT MODIFIED. REVISION CHANGED
5.3.2024	PF	D4:2005068;S_D.10 added
14.04.2022	RP	C3: SX1,SX.1 ADDED; S_S7in, S_S7out REMOVED; X3a/9 ADDED

Date	21.06.2021
Drawing by	TT
Sheet rev.	4
Project rev.	D

This document and all the information contained in it is proprietary and confidential information of Axopar Boats Oy. Neither this document nor any of the information contained herein may be reproduced, disclosed to others or used in any purpose other then for the prpose it has been provided without theprior writen permission of Axopar Boats Oy

Axopar Boat	SEE EXP VIEW Sub-product code	35165 Product code	Project ID
25 Boat model	SWITCH PANEL Title	HL Loc	33 / 47 Sheet

EXP VIEW

35165_AXOPAR_25_SWITCH_PANEL

1. 8pcs SWITCH (AS IN DIAGRAM)

2. 1pc 35290_AXOPAR_25_SWITCH_PANEL_ACRYLIC_PORT_V1
ATTACH TO THE RECESS WITH 35292 MS-POLYMER BLACK GLUE AND APPLY APPROX 3mm WIDE SEAM AROUND AT BOTTOM OF RECESS.

3. 1pc 35291_AXOPAR_25_SWITCH_PANEL_ACRYLIC_STB_V2
ATTACH TO THE RECESS WITH 35292 MS-POLYMER BLACK GLUE AND APPLY APPROX 3mm WIDE SEAM AROUND AT BOTTOM OF RECESS.

3. 1pc 35292_AXOPAR_25_SWITCH_PANEL_BASE_V1

4. 1pc 35293_AXOPAR_25_SWITCH_PANEL_GASKET_V1

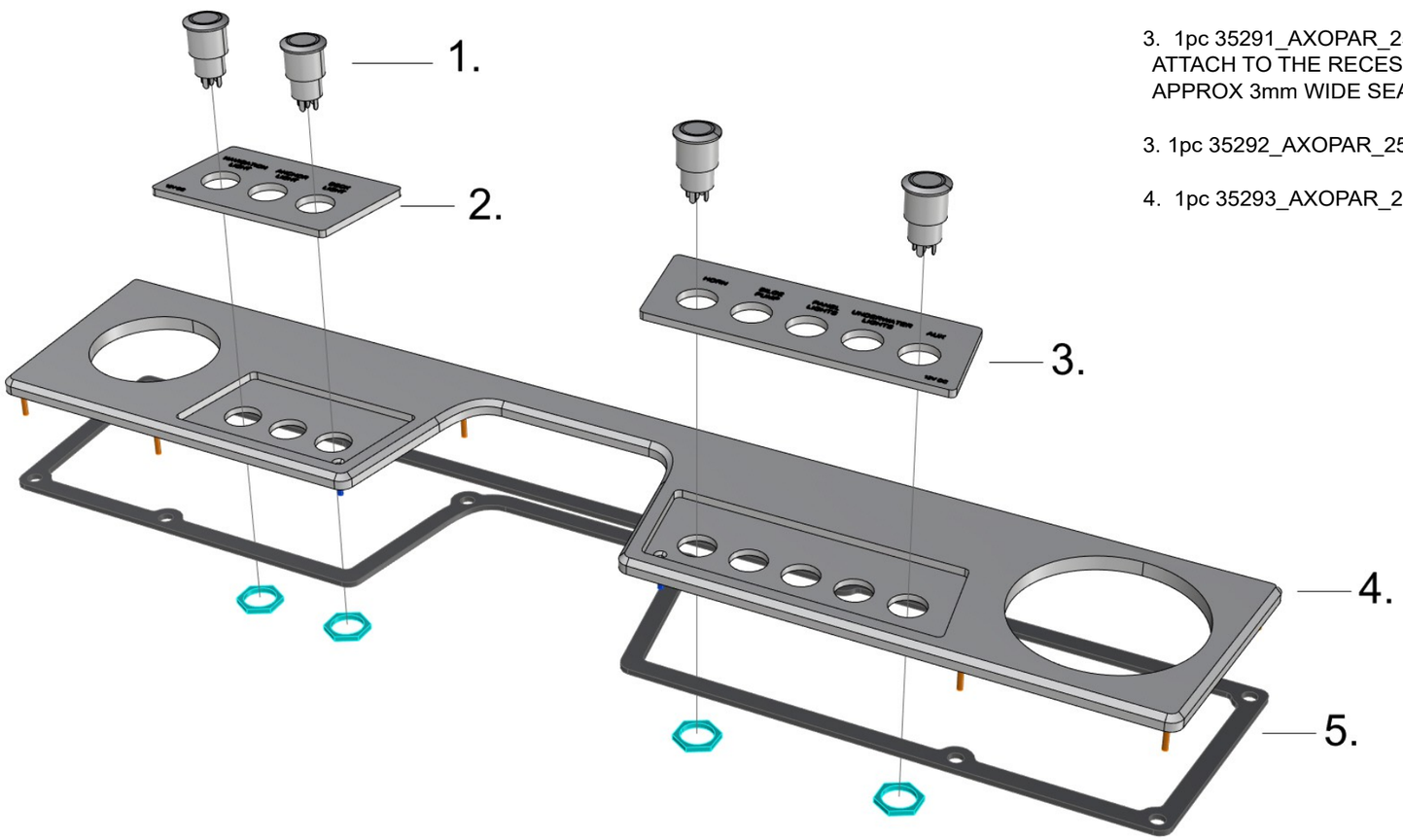

06.09.2022	TT	D3: NOT MODIFIED. REVISION CHANGED	Date	21.06.2021	This document and all the information contained in it is proprietary and confidential information of Axopar Boats Oy. Neither this document nor any of the information contained herein may be reproduced, disclosed to others or used in any purpose other then for the prpose it has been provided without theprior writen permission of Axopar Boats Oy	Axopar Boat	SEE EXP VIEW Sub-product code	35165 Product code	Project ID
5.3.2024	PF	D4:2005068;S_D.10 added	Drawing by	TT					
14.04.2022	RP	C3: SX1,SX.1 ADDED; S_S7in, S_S7out REMOVED; X3a/9 ADDED	Sheet rev.	4	AXOPAR / BRABUS MARINE	25 Boat model	SWITCH PANEL Title	HL Loc	34 / 47 Sheet
Date of modification	Modified by	Description	Project rev.	D					

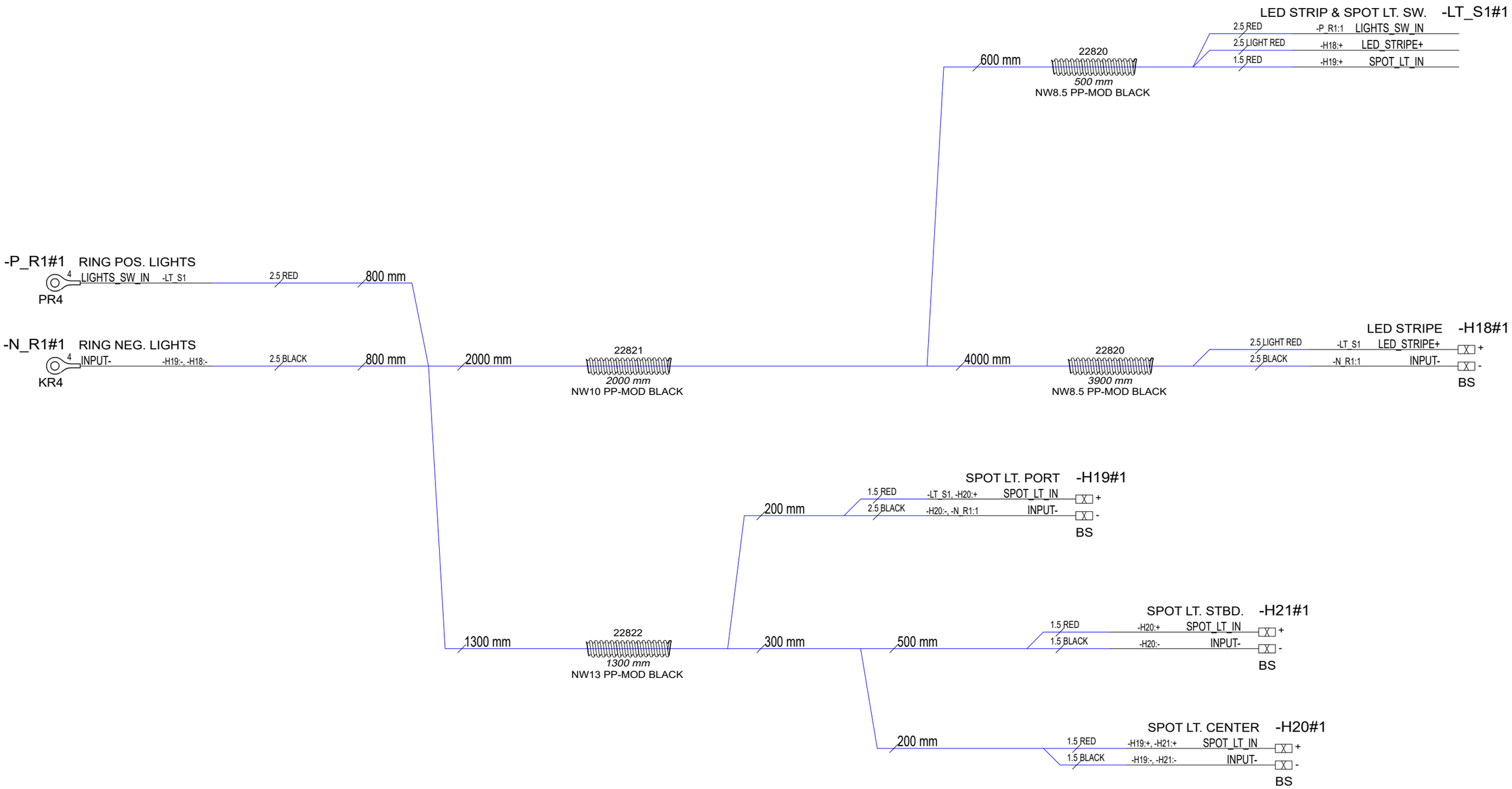

Date of modification	Modified by	Description
3.11.2021	VV	B1: INTRODUCED DRAWING.
06.09.2022	TT	D1: NOT MODIFIED. REVISION CHANGED

Date	3.11.2021
Drawing by	VV
Sheet rev.	1
Project rev.	D

This document and all the information contained in it is proprietary and confidential information of Axopar Boats Oy. Neither this document nor any of the information contained herein may be reproduced, disclosed to others or used in any purpose other then for the prpose it has been provided without theprior writen permission of Axopar Boats Oy

AXOPAR BRABUS MARINE

Axopar Boat		35693 Product code	Project ID
25 Boat model	UPPER LINER LIGHT HARNESS Title	HL Loc	35 / 47 Sheet

HARNESS GENERAL LAYOUT

NOTICE!
VERIFY THAT ALL CABLES HAVE MARKINGS
SHOWN IN EXAMPLE BELOW.

EXEMPTION:
ALL <500mm WIRES AND BLACK WIRES
THIS MARKING IS NOT NEEDED.

MARKING

R2 ISO 6722 100V AWG16 +100 C

CABLE

EXAMPLE: RED 1,5mm2 WIRE MARKINGS.

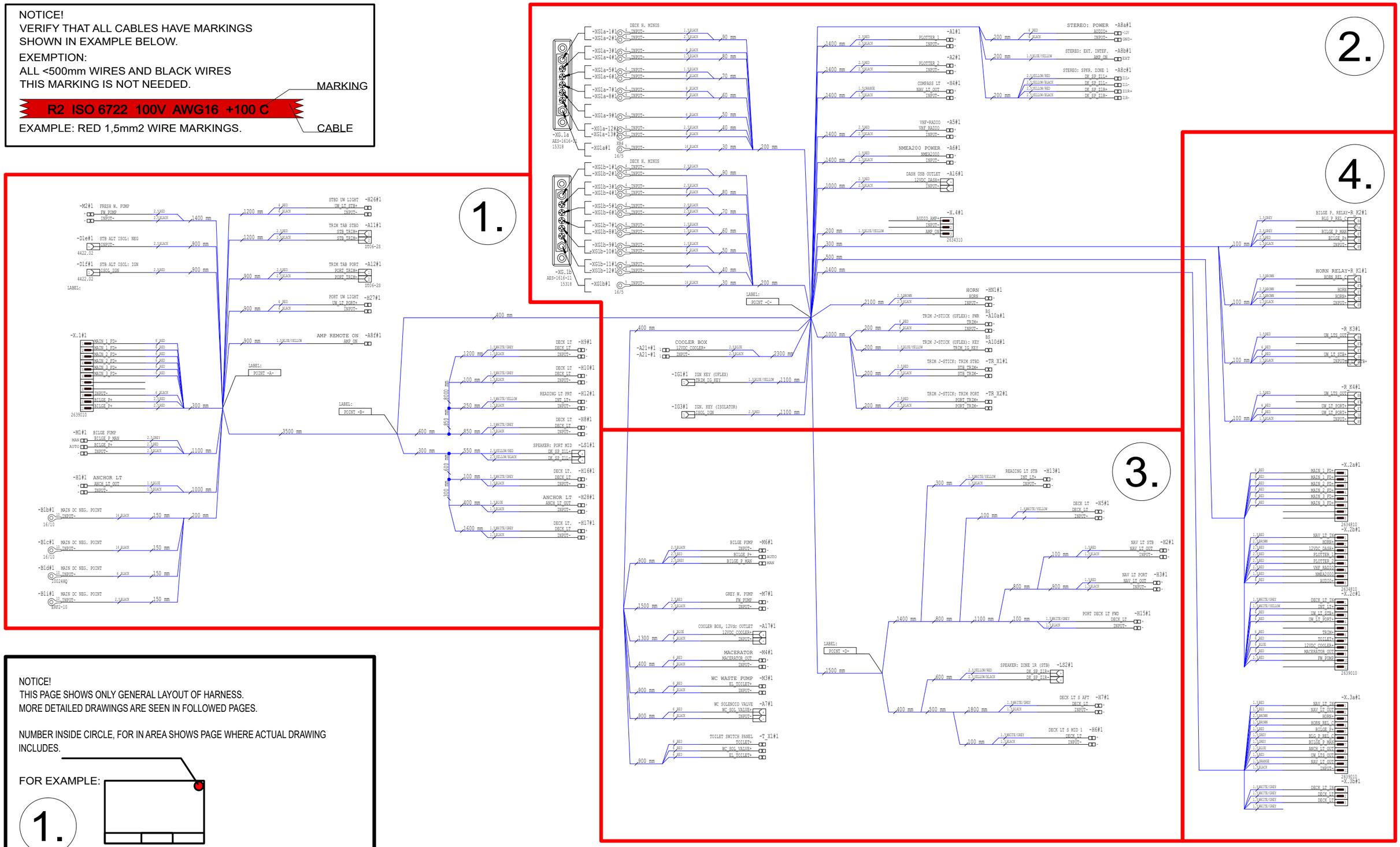

NOTICE!
THIS PAGE SHOWS ONLY GENERAL LAYOUT OF HARNESS.
MORE DETAILED DRAWINGS ARE SEEN IN FOLLOWED PAGES.

NUMBER INSIDE CIRCLE, FOR IN AREA SHOWS PAGE WHERE ACTUAL DRAWING INCLUDES.

FOR EXAMPLE:

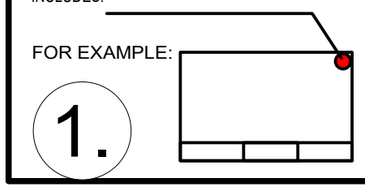

Date of modification	Modified by	Description
5.3.2024	PF	D4:2005068;R_K5, X3c added, BP connections changed
14.04.2022	RP	C2: R_K3,R_K4,H26,H27,A21 ADDED; HN1 MOVED TO PIINT "C"
06.09.2022	TT	D3: SEVERAL MODIFICATIONS; BRANCHES REARRANGED

Date	29.9.2021
Drawing by	VV
Sheet rev.	4
Project rev.	D

This document and all the information contained in it is proprietary and confidential information of Axopar Boats Oy. Neither this document nor any of the information contained herein may be reproduced, disclosed to others or used in any purpose other then for the prpose it has been provided without theprior writen permission of Axopar Boats Oy

AXOPAR BRABUS MARINE

Axopar			
Boat	Sub-product code	35694 Product code	Project ID
25	DECK HARNESS	HL	36 / 47
Boat model	Title	Loc	Sheet

1.

-M2#1 FRESH W. PUMP
+ FW_PUMP -X.2c:10 2.5 RED
- INPUT- -XG1b-6:1 2.5 BLACK
1400 mm

-D1e#1 STB ALT ISOL: NEG
INPUT- -B1i:1 2.5 BLACK
4422.02
900 mm

-D1f#1 STB ALT ISOL: IGN
ISOL_IGN -IG3:1 2.5 RED
4422.02
900 mm

LABEL:
NOTICE!
Connect ig-PIN only if self excitation is needed through isolator.
Otherwise do not connect.

-X.1#1
TO MAIN SWITCH UNIT

1	MAIN_1_FD+	-X.2a:1	6 RED
2	MAIN_1_FD+	-X.2a:2	6 RED
3	MAIN_2_FD+	-X.2a:3	6 RED
4	MAIN_2_FD+	-X.2a:4	6 RED
5	MAIN_3_FD+	-X.2a:5	6 RED
6	MAIN_3_FD+	-X.2a:6	6 RED
7			
8			
9	INPUT-	-B1d:1	6 BLACK
10	BILGE_P+	-R_K2:30, -M6:AUTO	4 RED
11	BILGE_P+	-M1:AUTO, -R_K5:30	4 RED

300 mm

-X.1#1
2639010
(11N BACK VIEW)
2639010

-M1#1 BILGE PUMP
MAN BILGE_P_MAN -R_K5:87 4 RED
AUTO BILGE_P+ -X.1:11 4 RED
- INPUT- -B1n:1 4 BLACK
1100 mm

-H1#1 ANCHOR LT
+ ANCH_LT_OUT -H28:+, -X.3a:8 1.5 BLUE
- INPUT- -XG1b-11:1, -H28 1.5 BLACK
1000 mm

-B1b#1 MAIN DC NEG. POINT
10 INPUT- -XG1a:1 16 BLACK 150 mm
16/10

-B1c#1 MAIN DC NEG. POINT
10 INPUT- -XG1b:1 16 BLACK 150 mm
16/10

-B1d#1 MAIN DC NEG. POINT
10 INPUT- -X.1:9 6 BLACK 150 mm
10024HQ

-B1i#1 MAIN DC NEG. POINT
10 INPUT- -D1e:- 2.5 BLACK 150 mm
ERF2-10

-B1n#1 MAIN DC NEG. POINT
10 INPUT- -M1:- 4 BLACK 150 mm
ERF5.5-10

200 mm

STBD UW LIGHT -H26#1
1200 mm
4 RED -R_K3:87 UW_LT_STB+ X
4 BLACK -XG1a-3:1 INPUT- X

TRIM TAB STBD -A11#1
1200 mm
2.5 RED -TR_X1 STB_TRIM+ 1
2.5 BLACK -TR_X1 STB_TRIM- 2
DT06-2S

-A11#1
DT06-2S
10930002
+WEDGELOCK: W2S
10930102

TRIM TAB PORT -A12#1
900 mm
2.5 RED -TR_X2 PORT_TRIM+ 1
2.5 BLACK -TR_X2 PORT_TRIM- 2
DT06-2S

-A12#1
DT06-2S
10930002
+WEDGELOCK: W2S
10930102

PORT UW LIGHT -H27#1
900 mm
4 RED -R_K4:87 UW_LT_PORT+ X
4 BLACK -XG1a-13:1 INPUT- X

AMP REMOTE ON -A8f#1
900 mm
1.5 BLUE/YELLOW -X.4:3 AMP_ON X

LABEL:
POINT -A-

LABEL:
POINT -B-

3500 mm

DELIVERED SEPARATELY
-A.11a & -A.12a
2 PCS DT04-2P
16461
+ 2PCS WEDGELOCK: W2P
16467

Pack the terminal frames and locking parts in a small bag and attach it to the wiring to the correct connector.

400 mm
/38.E4
TO POINT -C-

600 mm
850 mm
1200 mm
100 mm
250 mm

DECK LT -H9#1
1.5 WHITE/GREY -H8:+, -H10:+ DECK_LT X +
1.5 BLACK -H8:-, -H10:- INPUT- X -

DECK LT -H10#1
1.5 WHITE/GREY -H9:+ DECK_LT X +
1.5 BLACK -H9:- INPUT- X -

READING LT PRT -H12#1
1.5 WHITE/YELLOW -X.2c:2 INT_LT+ X +
1.5 BLACK -XG1a-5:1 INPUT- X -

DECK LT -H8#1
1.5 WHITE/GREY -X.3b:4, -H16:+, -H9:+ DECK_LT X +
1.5 BLACK -H16:-, -XG1b-7:1, -H9:- INPUT- X -

300 mm
550 mm
600 mm
300 mm
100 mm
400 mm
1600 mm

SPEAKER: PORT MID -LS1#1
2.5 YELLOW/RED -A8c:Z1L+ DK_SP_Z1L+ +
2.5 YELLOW/BLACK -A8c:Z1L- DK_SP_Z1L- -

DECK LT. -H16#1
1.5 WHITE/GREY -H8:+, -H17:+ DECK_LT X +
1.5 BLACK -H8:-, -H17:- INPUT- X -

ANCHOR LT -H28#1
1.5 BLUE -H1:+ ANCH_LT_OUT X +
1.5 BLACK -H1:- INPUT- X -

DECK LT. -H17#1
1.5 WHITE/GREY -H16:+ DECK_LT X +
1.5 BLACK -H16:- INPUT- X -

NOTICE!
BATTERY CABLES NEED TO ADD MARKINGS SHOWN IN EXAMPLE BELOW.
EXEMPTION:
ALL BLACK WIRES
THIS MARKING IS NOT NEEDED.

MARKING
R2 ISO 6722 100V AWG6 +100 C
CABLE

EXAMPLE: RED 16mm2 WIRE MARKINGS.

MARKING SHOWN ABOVE ONLY TO CABLES LISTED BELOW.

LOOK FOR EQUIVALENT AWG SIZE FOR mm2 AND ADD THIS TO CABLE MARKINGS.

FOR EXAMPLE:
CABLE SIZE IS 25mm2 --> MARKING AWG3.

EQUIVALENCY:

mm2		AWG
10 mm2	=	AWG8
16 mm2	=	AWG6
25 mm2	=	AWG3
35 mm2	=	AWG2

NOTICE! CABLES WITH STICKER
FOR EXAMPLE
POINT -A-

Date of modification	Modified by	Description
5.3.2024	PF	D4:2005068;R_K5, X3c added, BP connections changed
14.04.2022	RP	C2: R_K3,R_K4,H26,H27,A21 ADDED; HN1 MOVED TO PIINT "C"
06.09.2022	TT	D3: SEVERAL MODIFICATIONS; BRANCHES REARRANGED

Date	29.9.2021
Drawing by	VV
Sheet rev.	4
Project rev.	D

This document and all the information contained in it is proprietary and confidential information of Axopar Boats Oy. Neither this document nor any of the information contained herein may be reproduced, disclosed to others or used in any purpose other then for the prpose it has been provided without theprior writen permission of Axopar Boats Oy

AXOPAR BRABUS MARINE

Axopar			
Boat	Sub-product code	35694 Product code	Project ID
25	DECK HARNESS	HL	37 / 47
Boat model	Title	Loc	Sheet

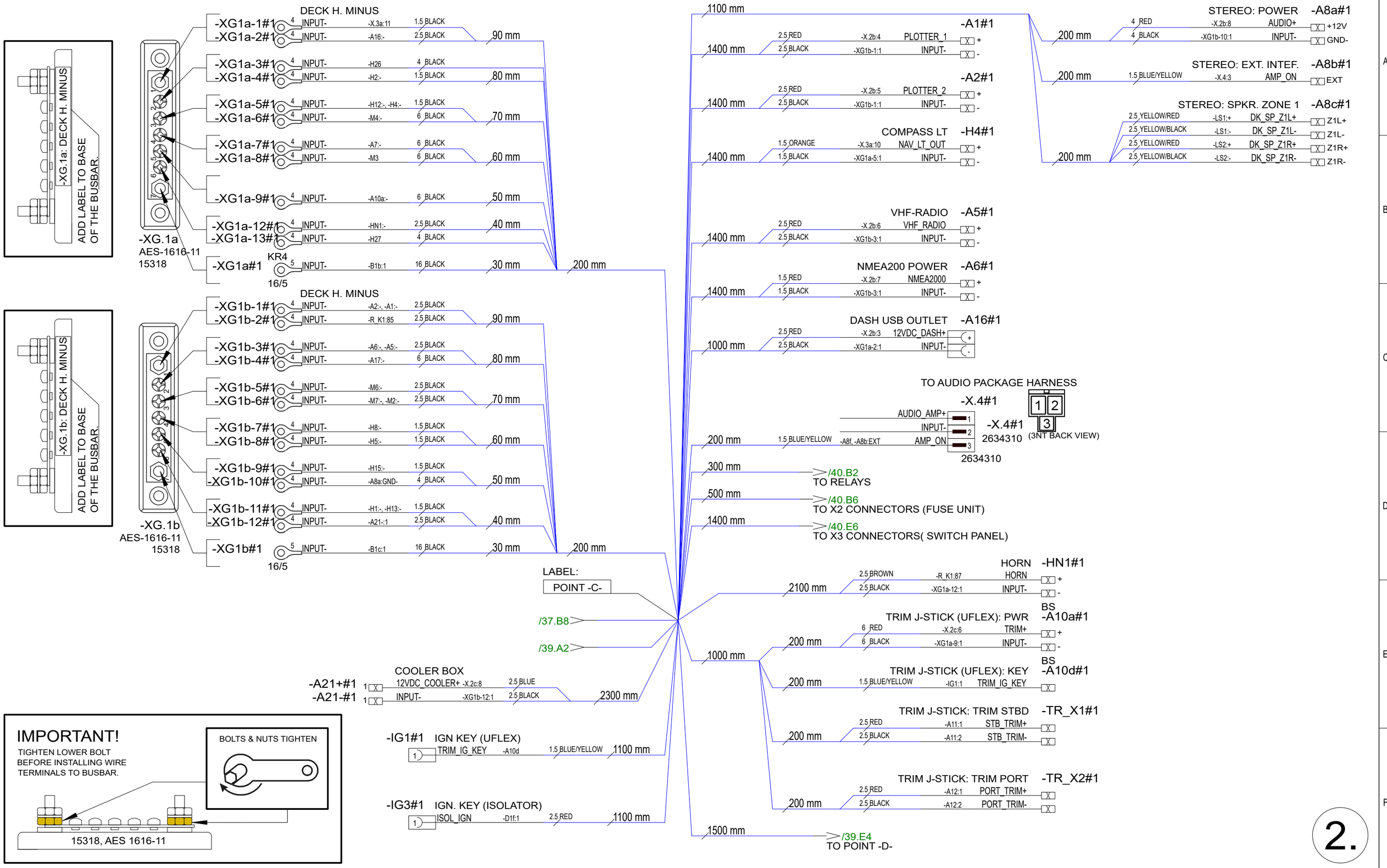

5.3.2024	PF	D4:2005068;R_K5, X3c added, BP connections changed	Date	29.9.2021	This document and all the information contained in it is proprietary and confidential information of Axopar Boats Oy. Neither this document nor any of the information contained herein may be reproduced, disclosed to others or used in any purpose other then for the prpose it has been provided without theprior writen permission of Axopar Boats Oy	Axopar		
14.04.2022	RP	C2: R_K3,R_K4,H26,H27,A21 ADDED; HN1 MOVED TO PIINT "C"	Drawing by	VV		Boat	Sub-product code	35694 Product code	Project ID
06.09.2022	TT	D3: SEVERAL MODIFICATIONS; BRANCHES REARRANGED	Sheet rev.	4	AXOPAR / BRABUS MARINE	25	DECK HARNESS	HL	38 / 47
Date of modification	Modified by	Description	Project rev.	D		Boat model	Title	Loc	Sheet

3.

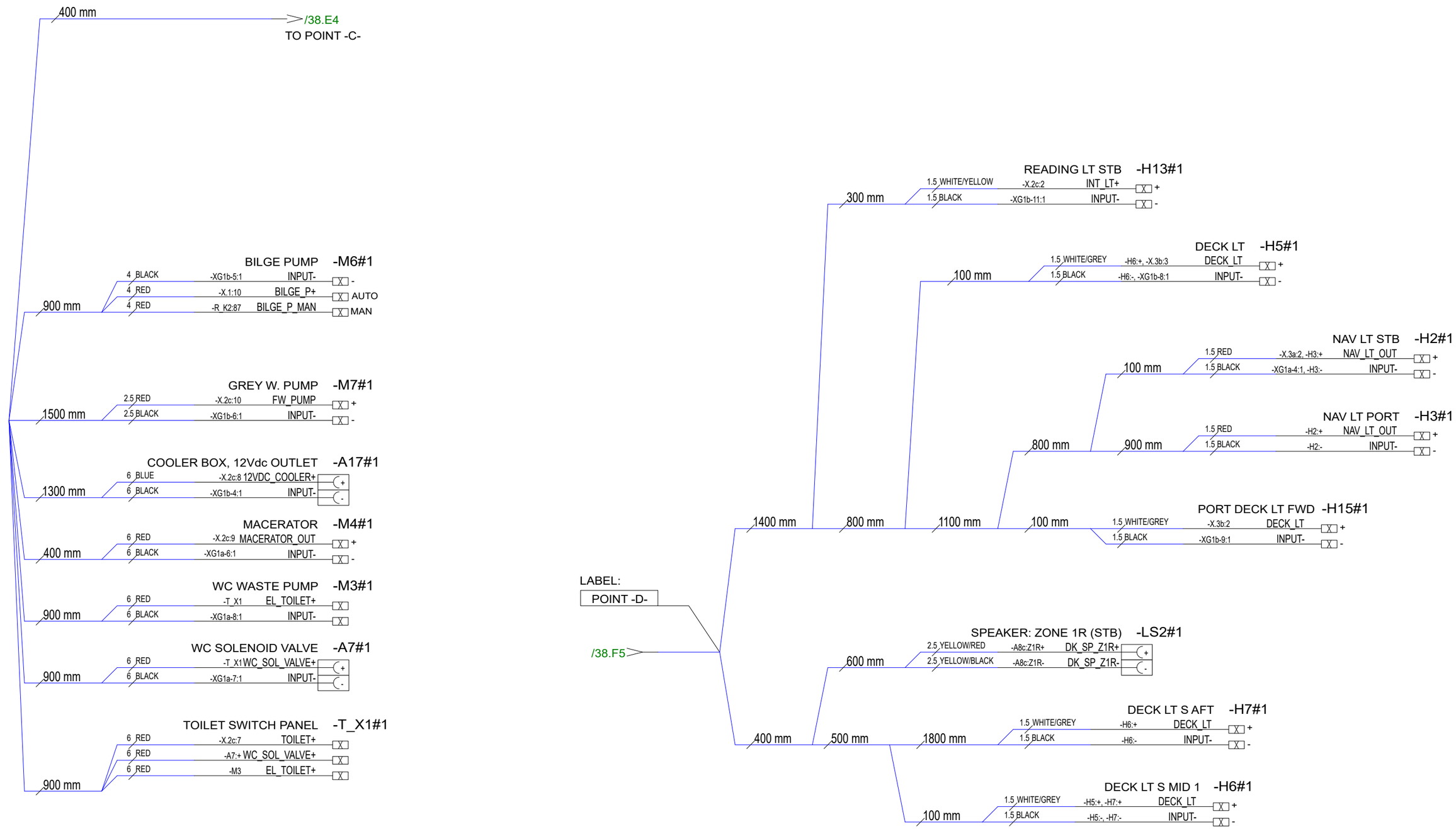

5.3.2024	PF	D4:2005068;R_K5, X3c added, BP connections changed	Date 29.9.2021	This document and all the information contained in it is proprietary and confidential information of Axopar Boats Oy. Neither this document nor any of the information contained herein may be reproduced, disclosed to others or used in any purpose other then for the prpose it has been provided without theprior writen permission of Axopar Boats Oy	Axopar			
14.04.2022	RP	C2: R_K3,R_K4,H26,H27,A21 ADDED; HN1 MOVED TO PIINT "C"	Drawing by VV		Boat	Sub-product code	35694 Product code	Project ID
06.09.2022	TT	D3: SEVERAL MODIFICATIONS; BRANCHES REARRANGED	Sheet rev. 4	AXOPAR / BRABUS MARINE	25	DECK HARNESS	HL	39 / 47
Date of modification	Modified by	Description	Project rev. D		Boat model	Title	Loc	Sheet

4.

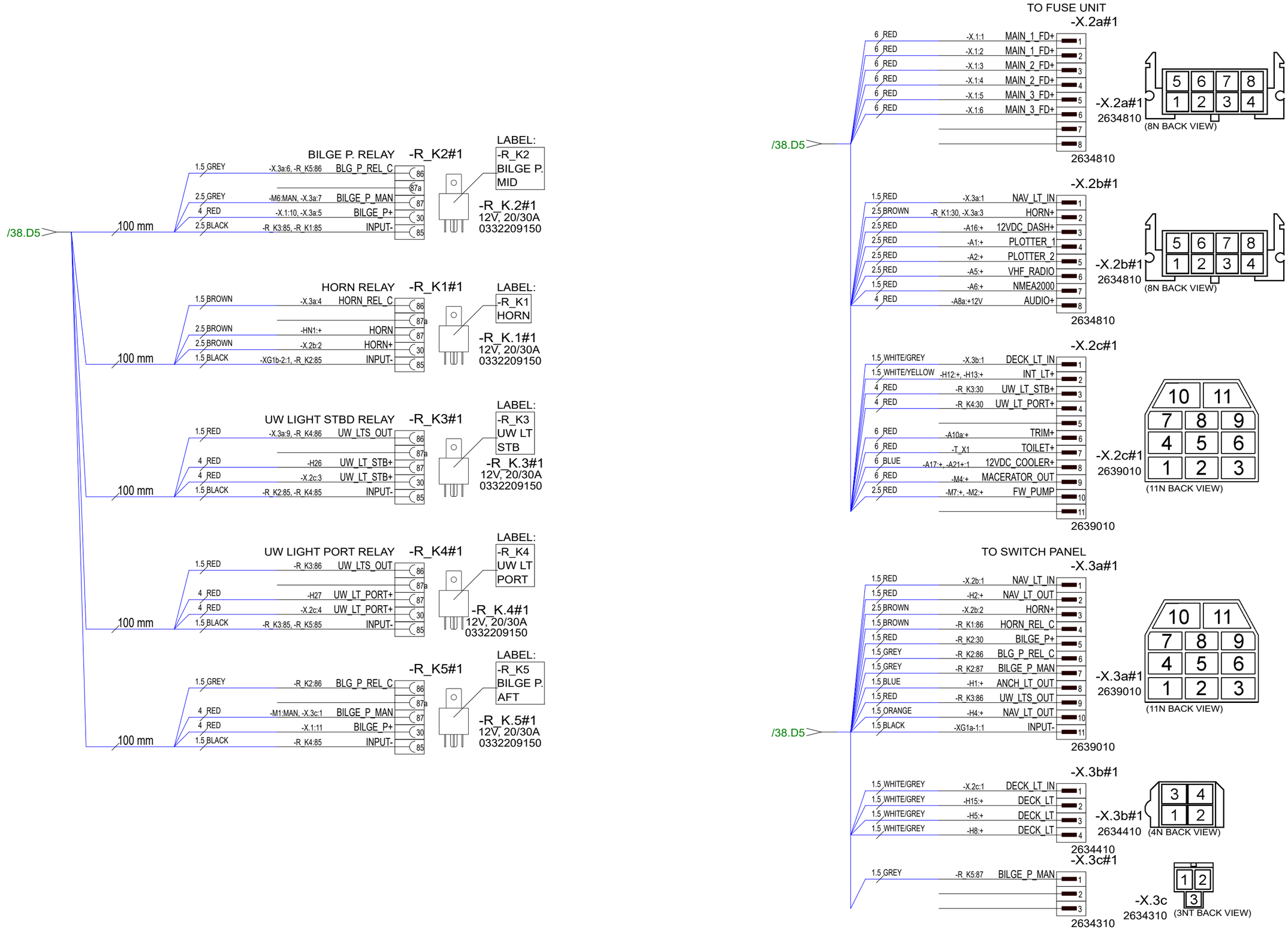

5.3.2024	PF	D4:2005068;R_K5, X3c added, BP connections changed	Date	29.9.2021	This document and all the information contained in it is proprietary and confidential information of Axopar Boats Oy. Neither this document nor any of the information contained herein may be reproduced, disclosed to others or used in any purpose other then for the prpose it has been provided without theprior writen permission of Axopar Boats Oy	Axopar		
14.04.2022	RP	C2: R_K3,R_K4,H26,H27,A21 ADDED; HN1 MOVED TO POINT "C"	Drawing by	VV		Boat	Sub-product code	35694 Product code	Project ID
06.09.2022	TT	D3: SEVERAL MODIFICATIONS; BRANCHES REARRANGED	Sheet rev.	4	AXOPAR / BRABUS MARINE	25	DECK HARNESS	HL	40 / 47
Date of modification	Modified by	Description	Project rev.	D		Boat model	Title	Loc	Sheet

NOTICE!
VERIFY THAT ALL CABLES HAVE MARKINGS
SHOWN IN EXAMPLE BELOW.
EXEMPTION:
ALL <500mm WIRES AND BLACK WIRES
THIS MARKING IS NOT NEEDED.

MARKING

R2 ISO 6722 100V AWG16 +100 C

CABLE

EXAMPLE: RED 1,5mm2 WIRE MARKINGS.

NOTICE!
BATTERY CABLES NEED TO ADD MARKINGS
SHOWN IN EXAMPLE BELOW. PRINTED EVERY 120mm.
EXEMPTION:
ALL BLACK WIRES
THIS MARKING IS NOT NEEDED.

MARKING

R2 ISO 6722 100V AWG3 +100 C

CABLE

EXAMPLE: RED 16mm2 WIRE MARKINGS.

MARKING SHOWN ABOVE ONLY TO CABLES LISTED BELOW.

	EQUIVALENCY:		
	mm2		AWG
LOOK FOR EQUIVALENT AWG SIZE FOR mm2	10 mm2	=	AWG8
AND ADD THIS TO CABLE MARKINGS.	16 mm2	=	AWG6
	25 mm2	=	AWG3
FOR EXAMPLE:	35 mm2	=	AWG2
CABLE SIZE IS 25mm2 --> MARKING AWG3.			

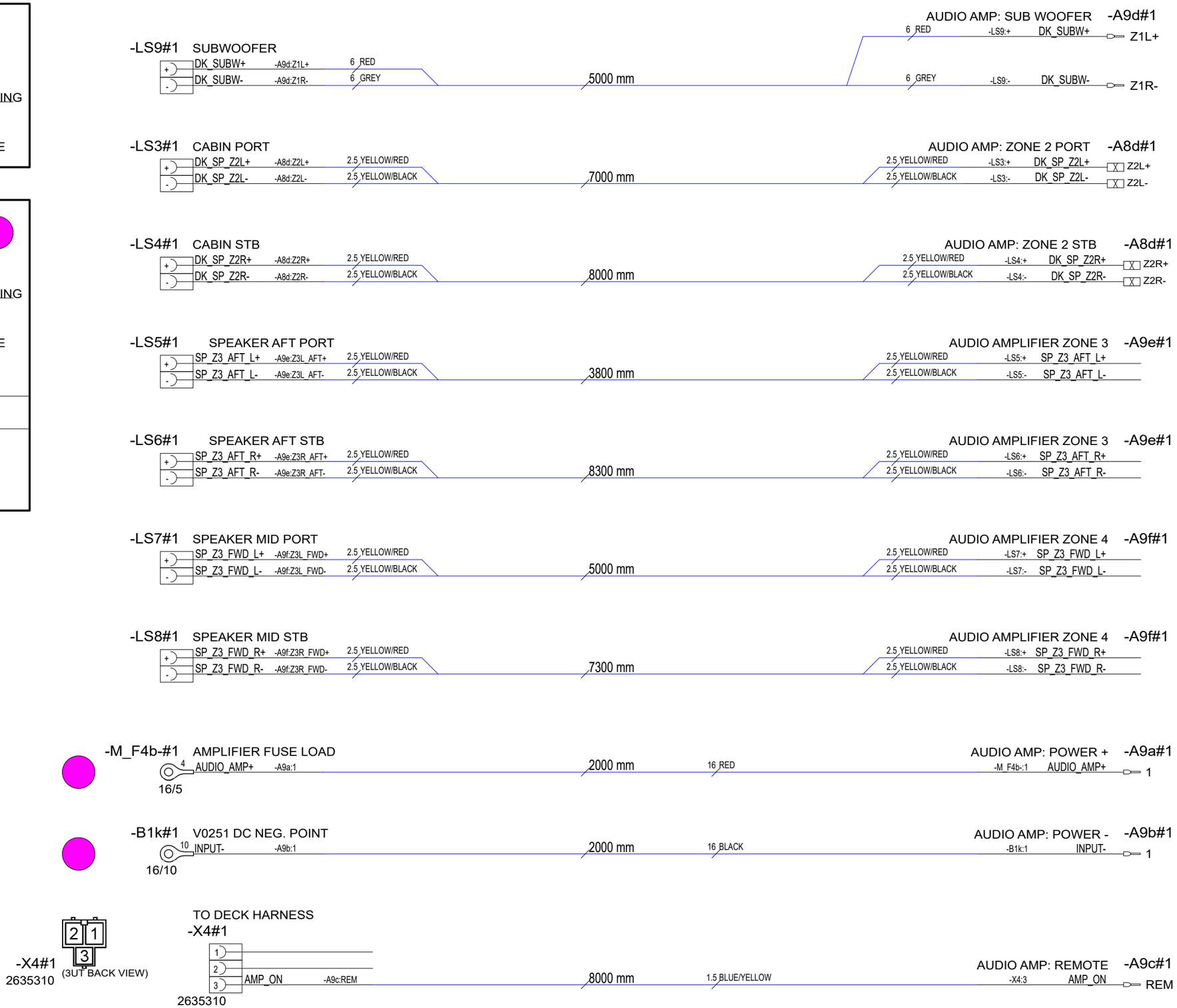

Date of modification	Modified by	Description
29.9.2021	VV	B1: INTRODUCED DRAWING.
06.09.2022	TT	D1: NOT MODIFIED. REVISION CHANGED

Date	29.9.2021
Drawing by	VV
Sheet rev.	1
Project rev.	D

This document and all the information contained in it is proprietary and confidential information of Axopar Boats Oy. Neither this document nor any of the information contained herein may be reproduced, disclosed to others or used in any purpose other then for the prpose it has been provided without theprior writen permission of Axopar Boats Oy

AXOPAR BRABUS MARINE

Axopar		35695	
Boat	Sub-product code	Product code	Project ID
25	AUDIO PACKAGE HARNESS	HL	41/ 47
Boat model	Title	Loc	Sheet

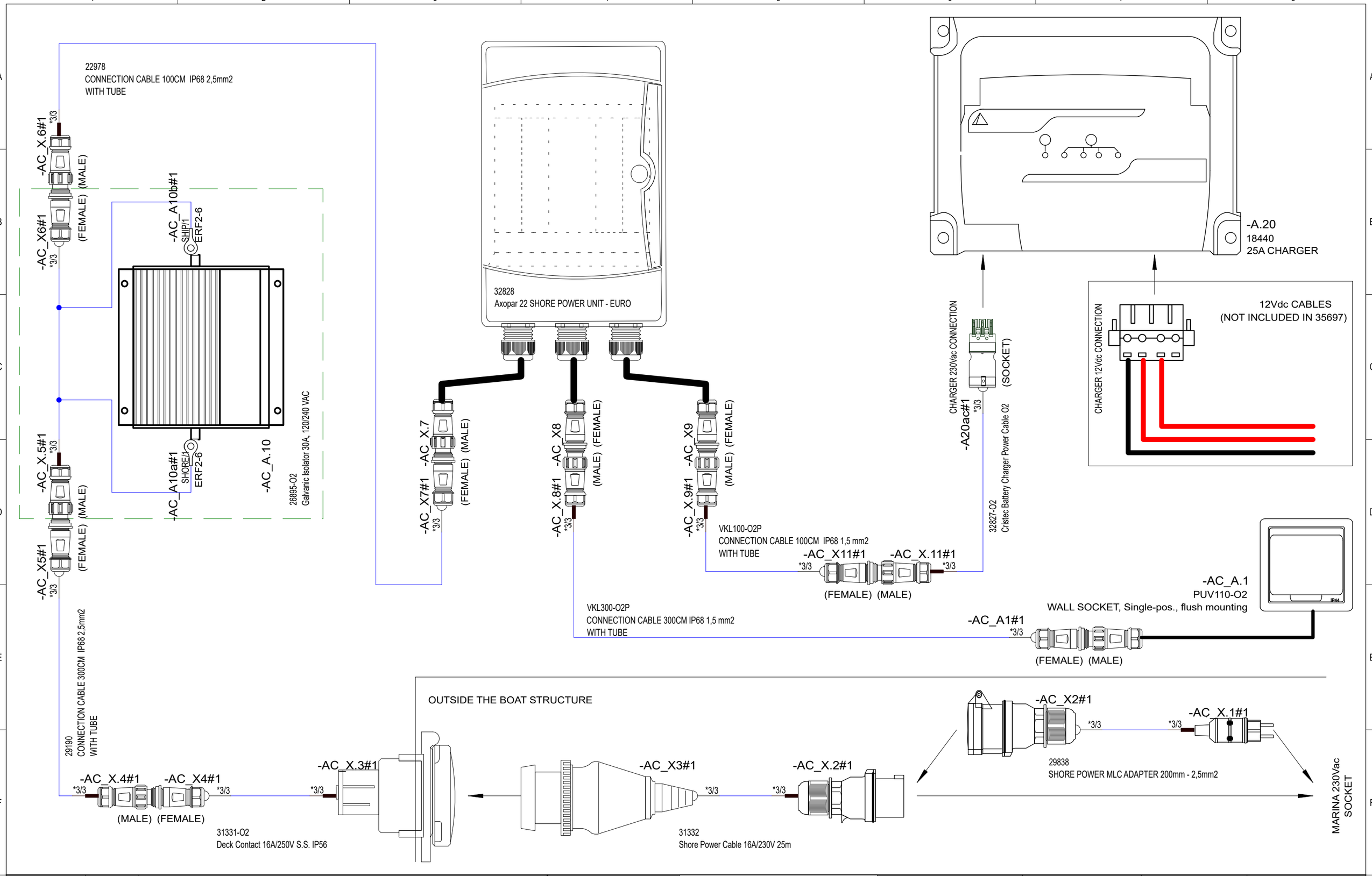

30.9.2021	VV	B1: INTRODUCED DRAWING.	Date	30.9.2021	This document and all the information contained in it is proprietary and confidential information of Axopar Boats Oy. Neither this document nor any of the information contained herein may be reproduced, disclosed to others or used in any purpose other then for the prpose it has been provided without theprior writen permission of Axopar Boats Oy	Axopar Boat	Sub-product code	35697 Product code	Project ID
06.09.2022	TT	D1: NOT MODIFIED. REVISION CHANGED	Drawing by	VV					
			Sheet rev.	1	AXOPAR / BRABUS MARINE	25 Boat model	SHORE POWER SYSTEM – EURO Title	HL Loc	42 / 47 Sheet
Date of modification	Modified by	Description	Project rev.	D					

NOTICE!
BATTERY CABLES NEED TO ADD MARKINGS
SHOWN IN EXAMPLE BELOW. PRINTED EVERY 120mm.

EXEMPTION:
ALL BLACK WIRES
THIS MARKING IS NOT NEEDED.

MARKING

R2 ISO 6722 100V AWG6 +100 C

CABLE

EXAMPLE: RED 16mm2 WIRE MARKINGS.

MARKING SHOWN ABOVE ONLY TO CABLES LISTED BELOW.

LOOK FOR EQUIVALENT AWG SIZE FOR mm2
AND ADD THIS TO CABLE MARKINGS.

FOR EXAMPLE:
CABLE SIZE IS 25mm2 --> MARKING AWG3.

EQUIVALENCY:

mm2		AWG
10 mm2	=	AWG8
16 mm2	=	AWG6
25 mm2	=	AWG3
35 mm2	=	AWG2

INCLUDED

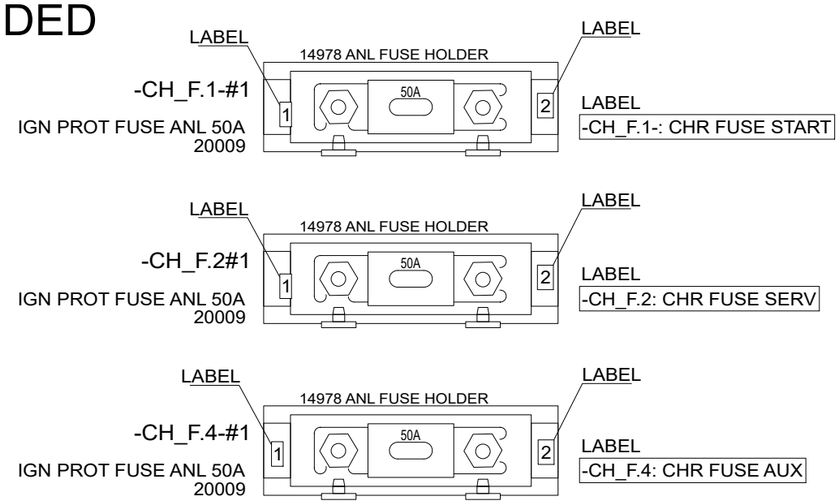

NOTICE! CABLES WITH STICKER

FOR EXAMPLE

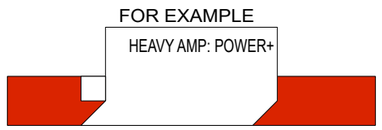

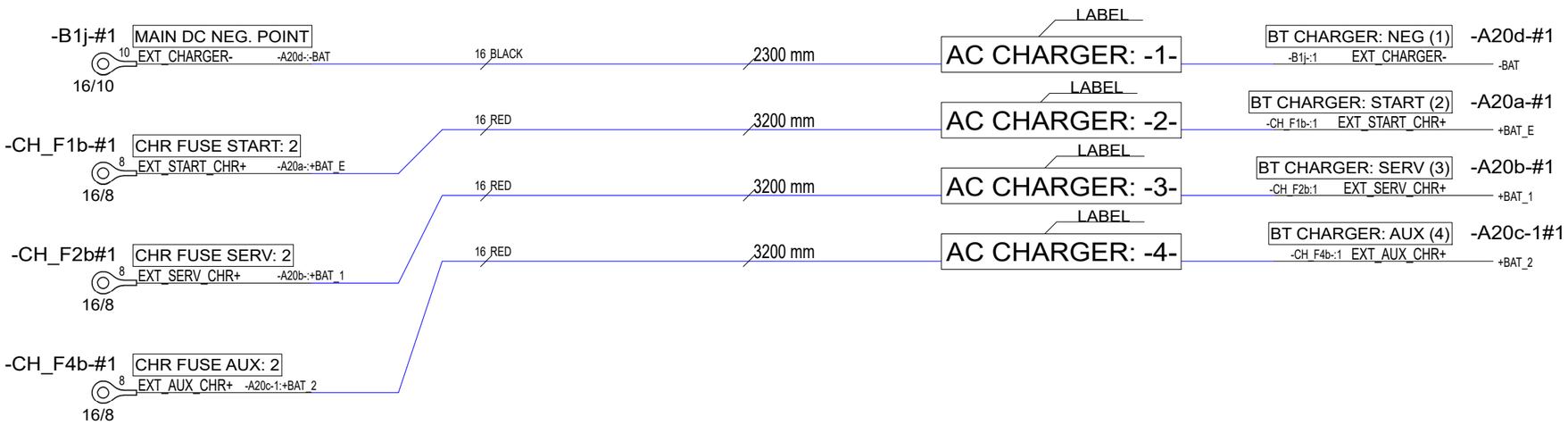

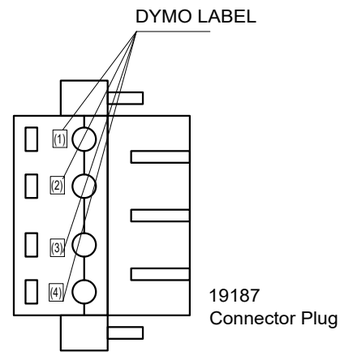

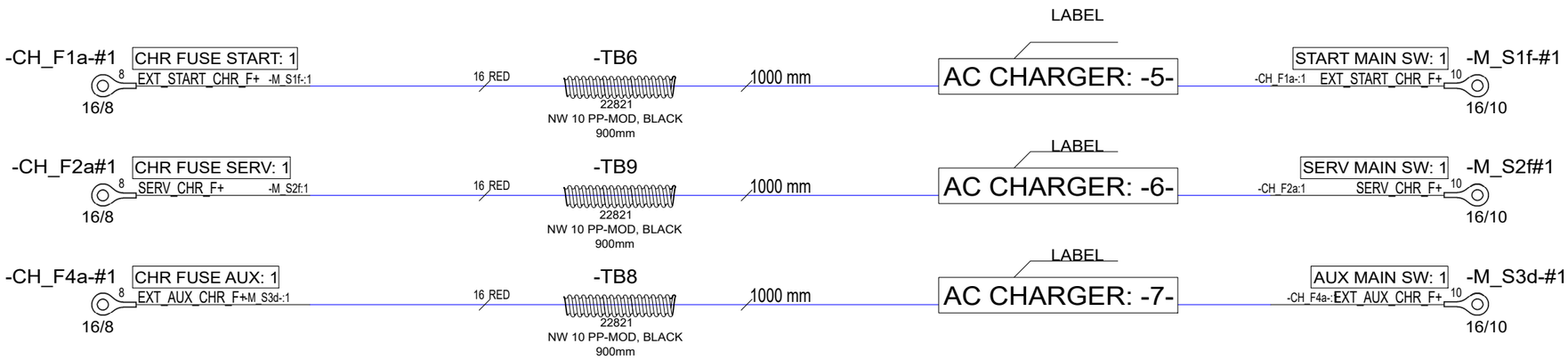

LABEL INSTRUCTIONS

NOTICE! PUT LABELS TO FUSE HOLDER
BASE - NOT TO COVER.

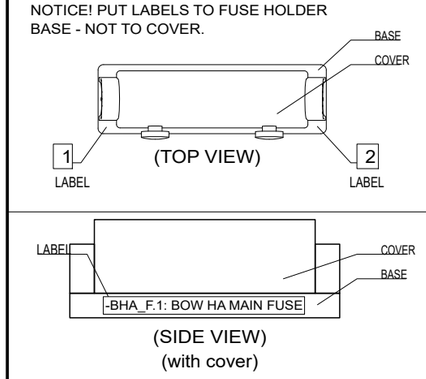

Date of modification	Modified by	Description
30.9.2021	VV	B1: INTRODUCED DRAWING.
06.09.2022	TT	D2: AUX FUSE & CABLES ADDED

Date	30.9.2021
Drawing by	VV
Sheet rev.	2
Project rev.	D

This document and all the information contained in it is proprietary and confidential information of Axopar Boats Oy. Neither this document nor any of the information contained herein may be reproduced, disclosed to others or used in any purpose other then for the prpose it has been provided without theprior writen permission of Axopar Boats Oy

AXOPAR BRABUS MARINE

Axopar			
Boat	Sub-product code	35698 Product code	Project ID
25	CHARGER CABLES EXTENDED	HL	43 / 47
Boat model	Title	Loc	Sheet

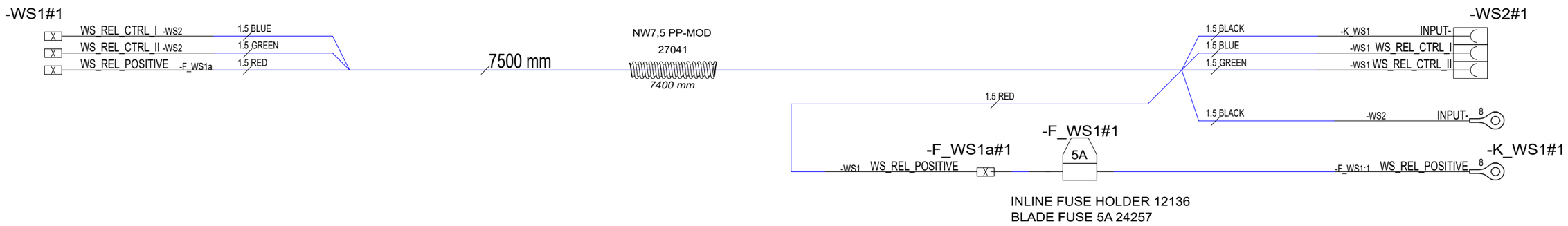

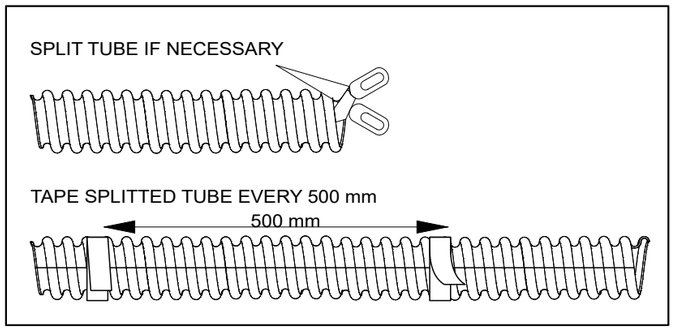

22.04.2022	RP	C1: INTRDUCED DRAWINGS	Date 22.04.2022	NAVIX.	Axopar			
06.09.2022	TT	D1: NOT MODIFIED. REVISION CHANGED	Drawing by RP		Boat	Sub-product code	36726 Product code	Project ID
			Sheet rev. 1		25	WINDLASS SIGNAL HARNESS	HL	44 / 47
Date of modification	Modified by	Description	Project rev. D	Copyright by	Boat model	Title	Loc	Sheet

NOTICE!
BATTERY CABLES NEED TO ADD MARKINGS
SHOWN IN EXAMPLE BELOW. PRINTED EVERY 120mm.
EXEMPTION:
ALL BLACK WIRES
THIS MARKING IS NOT NEEDED.

MARKING

R2 ISO 6722 100V AWG6 +100 C

CABLE

EXAMPLE: RED 16mm2 WIRE MARKINGS.

MARKING SHOWN ABOVE ONLY TO CABLES LISTED BELOW.

	EQUIVALENCY: mm2		AWG
LOOK FOR EQUIVALENT AWG SIZE FOR mm2	10 mm2	=	AWG8
AND ADD THIS TO CABLE MARKINGS.	16 mm2	=	AWG6
FOR EXAMPLE:	25 mm2	=	AWG3
CABLE SIZE IS 25mm2 --> MARKING AWG3.	35 mm2	=	AWG2

NOTICE! CABLES WITH STICKER

FOR EXAMPLE

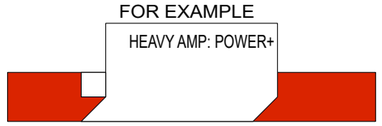

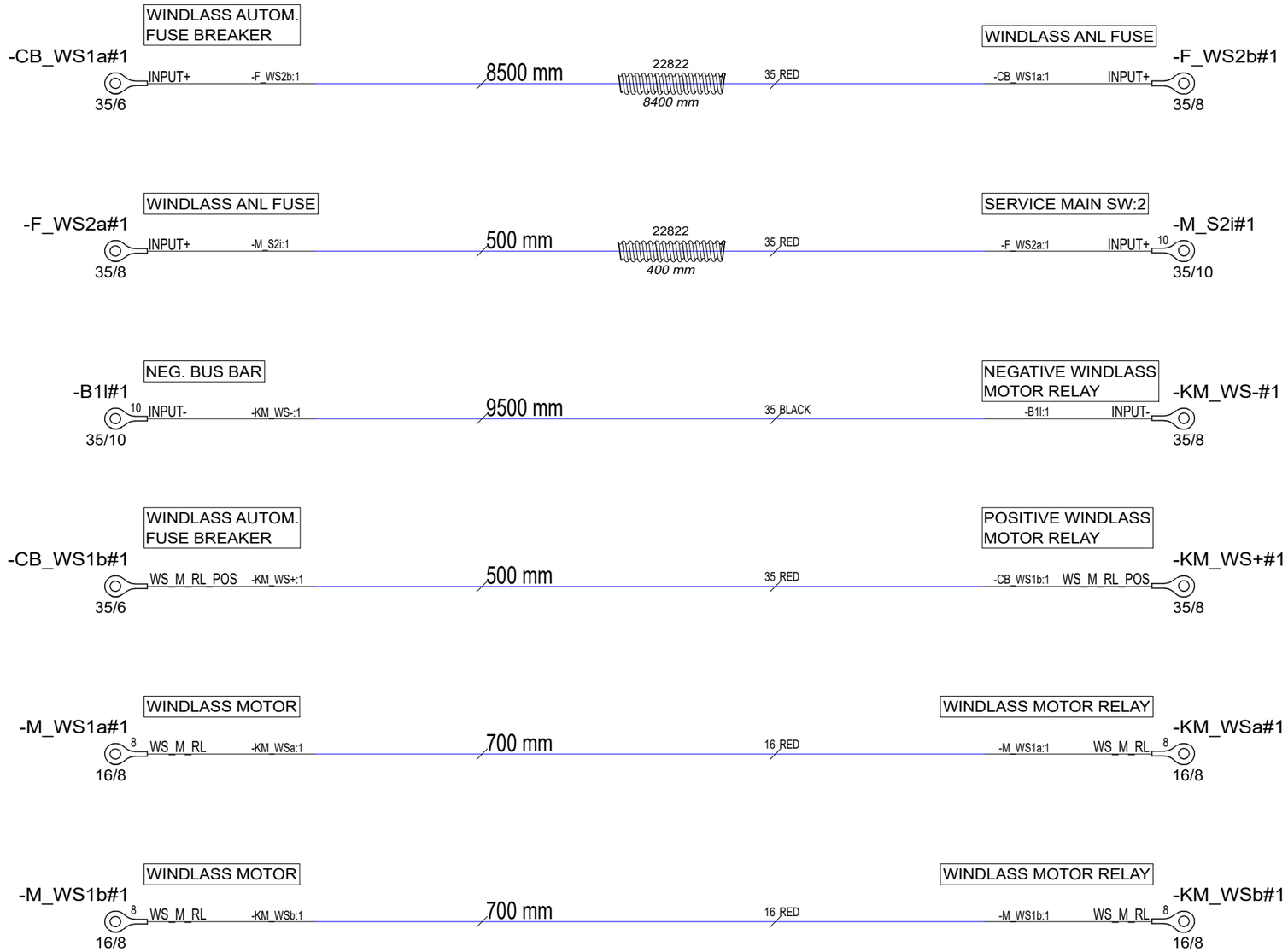

INCLUDED!

-F_WS.2#1

23030

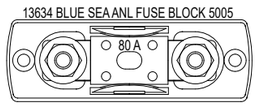

22.04.2022	RP	C1: INTRDUCED DRAWINGS	Date	22.04.2022	NAVIX.	Axopar		
06.09.2022	TT	D1: NOT MODIFIED. REVISION CHANGED	Drawing by	RP		Boat	Sub-product code	36727 Product code	Project ID
			Sheet rev.	1		25	WINDLASS POWER CABLES	HL	45 / 47
Date of modification	Modified by	Description	Project rev.	D	Copyright by	Boat model	Title	Loc	Sheet

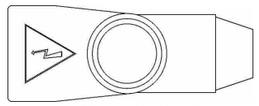

11067/456N9V02

227

INSULATOR FOR BATTERY TERMINAL WITH BOLT RED

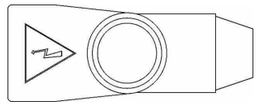

11068/456N9V14

228

INSULATOR FOR BATTERY TERMINAL WITH BOLT BLACK

-G3a#1	AUX BATTERY+	10 AUX_BT_F+	-HA_F2a:1	95 RED	1500 mm	22823 1400 mm NW17 PP-MOD BLACK	AUX: -1- (LABEL)	H. AUX FUSE: 1	-HA_F2a#1
95/10								-G3a:1 AUX_BT_F+ 8	95/8
-G3b#1	AUX BATTERY-	10 AUX_BT-	-B1e:1	95 BLACK	1800 mm		AUX: -2- (LABEL)	MAIN DC NEG. POINT	-B1e#1
95/10								-G3b:1 AUX_BT- 10	95/10
-HA_F2b#1	H. AUX FUSE: 2	8 AUX_BT_F+	-M_S3a:1	95 RED	2500 mm		AUX: -3- (LABEL)	AUX MAIN SW.	-M_S3a#1
95/8								-HA_F2b:1 AUX_BT_F+ 10	95/10
-M_S3b#1	AUX MAIN SW	10 AUX_BT	-M9a:1	95 RED	10000 mm		BOW THRUSTER: -1- (LABEL)	BOW THRUSTER	-M9a#1
95/10								-M_S3b:1 AUX_BT 8	95/8
-B1h#1	MAIN DC NEG. POINT	10 INPUT-	-M9b:1	95 BLACK	8000 mm		BOW THRUSTER: -2- (LABEL)	BOW THRUSTER	-M9b#1
95/10								-B1h:1 INPUT- 8	95/8
-M_S3e#1	AUX MAIN SW.	10 AUX_ALT_F+	-A_F2a:1	70 RED	1000 mm		ALTERN: -6- (LABEL)	ALT. FUSE AUX: 1	-A_F2a#1
70/10						22823 900 mm NW17 PP-MOD BLACK		-M_S3e:1 AUX_ALT_F+ 8	70/8
-D1d#1	ALT. ISOL: OUT 3	6 ALT_SERV_ISOL+	-A_F2b:1	70 RED	500 mm		ALTERN: -7- (LABEL)	ALT. FUSE AUX: 2	-A_F2b#1
70/6								-D1d:1 ALT_SERV_ISOL+ 8	70/8

NOTICE!
BATTERY CABLES NEED TO ADD MARKINGS
SHOWN IN EXAMPLE BELOW.

EXEMPTION:
ALL BLACK WIRES
THIS MARKING IS NOT NEEDED.

MARKING

RK90/115 750Vac/ 1000Vdc AWG0 GR90/115 C

EXAMPLE: RED 50mm2 WIRE MARKINGS.

CABLE

MARKING SHOWN ABOVE ONLY TO CABLES LISTED BELOW.

LOOK FOR EQUIVALENT AWG SIZE FOR mm2
AND ADD THIS TO CABLE MARKINGS.

FOR EXAMPLE:
CABLE SIZE IS 70mm2 --> MARKING AWG2/0.

EQUIVALENCY:

mm2		AWG
50 mm2	=	AWG0
35 mm2	=	AWG2
70 mm2	=	AWG2/0
95 mm2	=	AWG3/0
120 mm2	=	250 kcmil

NOTICE! CABLES WITH STICKER

FOR EXAMPLE

HEAVY AMP: POWER+

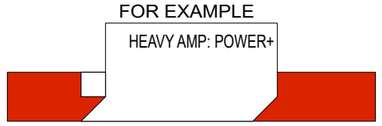

INCLUDED

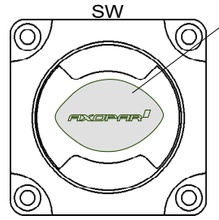

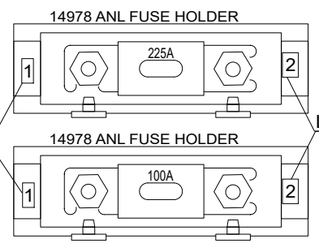

LABEL INSTRUCTIONS

NOTICE! PUT LABELS TO FUSE HOLDER
BASE - NOT TO COVER.

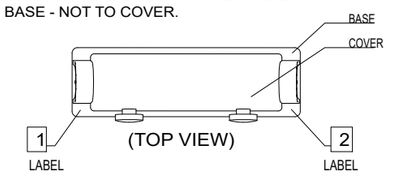

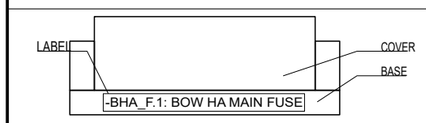

(SIDE VIEW)
(with cover)

Date of modification	Modified by	Description
13.09.2022	TT	D1: INTRODUCED DRAWING
16.06.2023	TT	D2: BOW WINCH FUSE & CABLES REMOVED

Date	13.09.2022
Drawing by	TT
Sheet rev.	2
Project rev.	D

This document and all the information contained in it is proprietary and confidential information of Axopar Boats Oy. Neither this document nor any of the information contained herein may be reproduced, disclosed to others or used in any purpose other then for the prpose it has been provided without theprior writen permission of Axopar Boats Oy

Axopar			
Boat	Sub-product code	37578 Product code	Project ID
25	BOW TH. CABLES	HL	46 / 47
Boat model	Title	Loc	Sheet

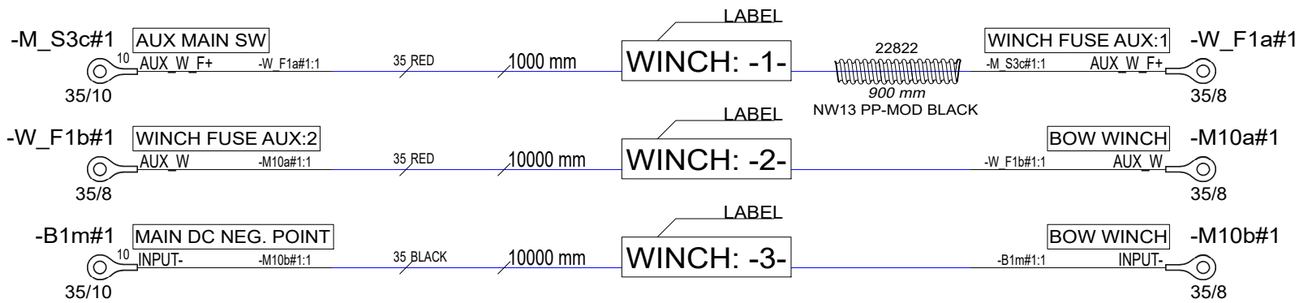

NOTICE! CABLES WITH STICKER

FOR EXAMPLE

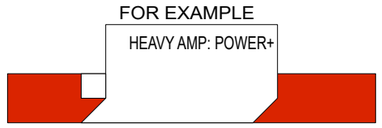

NOTICE!
BATTERY CABLES NEED TO ADD MARKINGS
SHOWN IN EXAMPLE BELOW.

EXEMPTION:
ALL BLACK WIRES
THIS MARKING IS NOT NEEDED.

MARKING

RK90/115 750Vac/ 1000Vdc AWG0 GR90/115 C

CABLE

EXAMPLE: RED 50mm2 WIRE MARKINGS.

MARKING SHOWN ABOVE ONLY TO CABLES LISTED BELOW.

LOOK FOR EQUIVALENT AWG SIZE FOR mm2
AND ADD THIS TO CABLE MARKINGS.

FOR EXAMPLE:
CABLE SIZE IS 70mm2 --> MARKING AWG2/0.

EQUIVALENCY:

mm2		AWG
50 mm2	=	AWG0
35 mm2	=	AWG2
70 mm2	=	AWG2/0
95 mm2	=	AWG3/0
120 mm2	=	250 kcmil

LABEL INSTRUCTIONS

NOTICE! PUT LABELS TO FUSE HOLDER
BASE - NOT TO COVER.

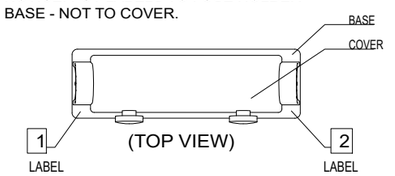

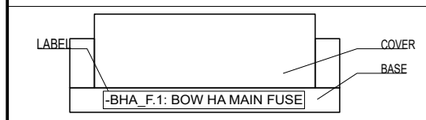

(SIDE VIEW)
(with cover)

INCLUDED

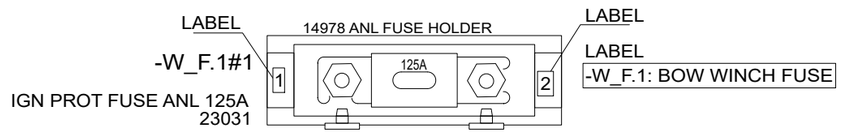

16.06.2023	TT	D1: INTRODUCED DRAWING	Date	16.06.2023	Axopar		
			Drawing by	TT	Boat	Sub-product code	39410 Product code	Project ID
			Sheet rev.	1	25	BOW WINCH CABLES	HL	47 / 47
Date of modification	Modified by	Description	Project rev.	D	Boat model	Title	Loc	Sheet

This document and all the information contained in it is proprietary and confidential information of Axopar Boats Oy. Neither this document nor any of the information contained herein may be reproduced, disclosed to others or used in any purpose other then for the prpose it has been provided without theprior writen permission of Axopar Boats Oy

AXOPAR BRABUS MARINE

DRAFT DRAFT DRAFT

Table of Contents

1 Decontamination criteria based on UMPS III, Table 3 3

2 Example of AIS Owner's Manual Information 4

3 Additional boat-specific recommendations 6

© 2021 Axopar Boats

1 Decontamination criteria based on UMPS III, Table 3

The table is a summary of scientific research indicating the lethal water temperature at point of contact and duration for decontamination. Information is grouped by the location of the boat that is targeted and the life form of Dreissenid mussel targeted (e.g., adult mussel or veliger). Please refer to the *Student Training Curriculum for Watercraft Inspectors and Decontaminators to Prevent and Contain the Spread of Aquatic Invasive Species in the USA* for complete step by step procedures.

	Boat part/ location	**Water temperature**	**Duration[1)] (sec)**	**Type of application**	**Target life stage**
Exterior	Hull	140°F	10	High pressure spray[2)]	Adult
	Trailer	140°F	70	Low pressure spray[3)]	Adult
	PFDs, anchor, paddle	140°F	10	Low pressure spray	Adult or Veliger
Propulsion system	Gimbal	140°F	132	Low pressure spray	Adult
	Engine	140°F[5), 6)]	See note[7)].	Flush[6)]	Veliger
Interior	Ballast tanks	120°F	130	*Low risk* – Flush[4)] *High risk* – Fill and flush	Veliger
	Live well/bait well	120°F	130	Low pressure spray or flush	Veliger
	Bilge	120°F	130	Flush or low pressure spray	Veliger

1) The times listed are the minimum times necessary to achieve mortality.

2) High pressure = 3000 psi.

3) Low pressure = using the pressure from the decontamination unit with no nozzle, not to exceed 60 psi (essentially a garden hose flow).

4) Flush = adding water to a compartment of a boat to treat or force the water out.

5) These temperatures denote the exit temperature (i.e., temperature of water exiting the boat not exiting the wand or flush attachment).

6) When flushing engines with a dedicated connection (not muffs), the pressure should be limited to less than 60 psi to prevent internal engine damage. The maximum input temperature during flushing should not exceed 140°F.

7) *NOTE: Engine flushing relies on the exit temperature as a guideline for decontamination duration.*

© 2021 Axopar Boats

2 Example of AIS Owner's Manual Information

Aquatic invasive species

Aquatic invasive species (AIS) are plants and animals that occur in waters in which they are not native and whose introduction causes or is likely to cause economic or environmental damage or harm to human health. AIS have a negative impact on the waterway, its native species, and recreational and commercial uses of the waterway.

As responsible boaters and citizens, each boat owner should do their part to prevent the spread of these aquatichitchhikers. In many cases, it is also required by law. Check local regulations for any waterway where you will boat.

After each boating trip, follow these three simple steps before you leave the water access to stop the spread of AIS: Clean, Drain, and Dry. This is the boater's way to help protect the environment from the damage that AIS can cause.

Clean

Inspect and remove all aquatic plants, animals, mud, and debris from the boat, engine, trailer, anchor, and any watersports equipment.

- Rinse, scrub or wash, as appropriate, away from storm drains, ditches, or waterways.
- Rinse watercraft, trailer, and equipment with hot water, when possible.
- Flush motor according to owner's manual.

Drain

Completely drain all water from the boat and its compartments, including but not limited to the bilge, wells, lockers, ballast tanks or bags, bait containers, engines, and outdrives.

Dry

Allow the boat to completely dry before visiting any other bodies of water.

© 2021 Axopar Boats

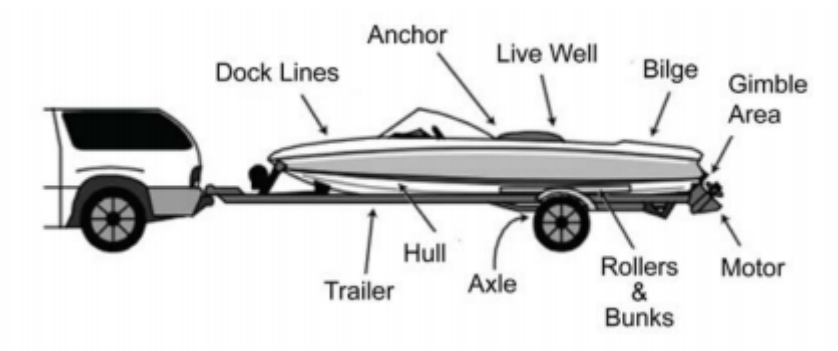

NOTE: Some localities may require inspection or decontamination before and/or after launching. Check state and local laws and regulations for requirements prior to traveling to go boating.

3 Additional boat-specific recommendations

Nonmotorized watercraft

Canoes, rafts, kayaks, rowboats, paddleboats, inflatables, sculls, and other nonmotorized recreational watercraft also require proper treatment.

- **Clean** straps, gear, paddles, floats, ropes, anchors, dip nets, and trailer before leaving the water body.
- **Dry** everything completely between each use and before storing.
- **Wear** quick-dry footwear or bring a second pair of footwear with you when portaging between waterbodies.

Sailboats

- **Clean** centerboard, bilge board, wells, rudderpost, trailer, and other equipment before leaving the water body.
- **Drain** water from boat, motor, bilge, ballast, wells, and portable bait containers before leaving the water body.

Motorized watercraft

- **Inspect** and **clean** motor or engine, including the gimbal area; trailer, including axles, bunkers, and rollers; anchors; dock lines; and equipment before leaving the water body.
- **Drain** live wells, bait containers, ballast and bilge tanks, and engine cooling systems.

Jet boats and personal watercraft (PWCs)

- **Inspect** and **clean** hull, trailer, intake grate, and steering nozzle, etc.
- **Clean** hull, trailer, intake grate, and steering nozzle, etc before leaving the water access.
- **Run** engine 5-10 sec to blow out excess water and vegetation from internal drive before leaving the waterbody.

© 2021 Axopar Boats

DRAFT DRAFT DRAFT

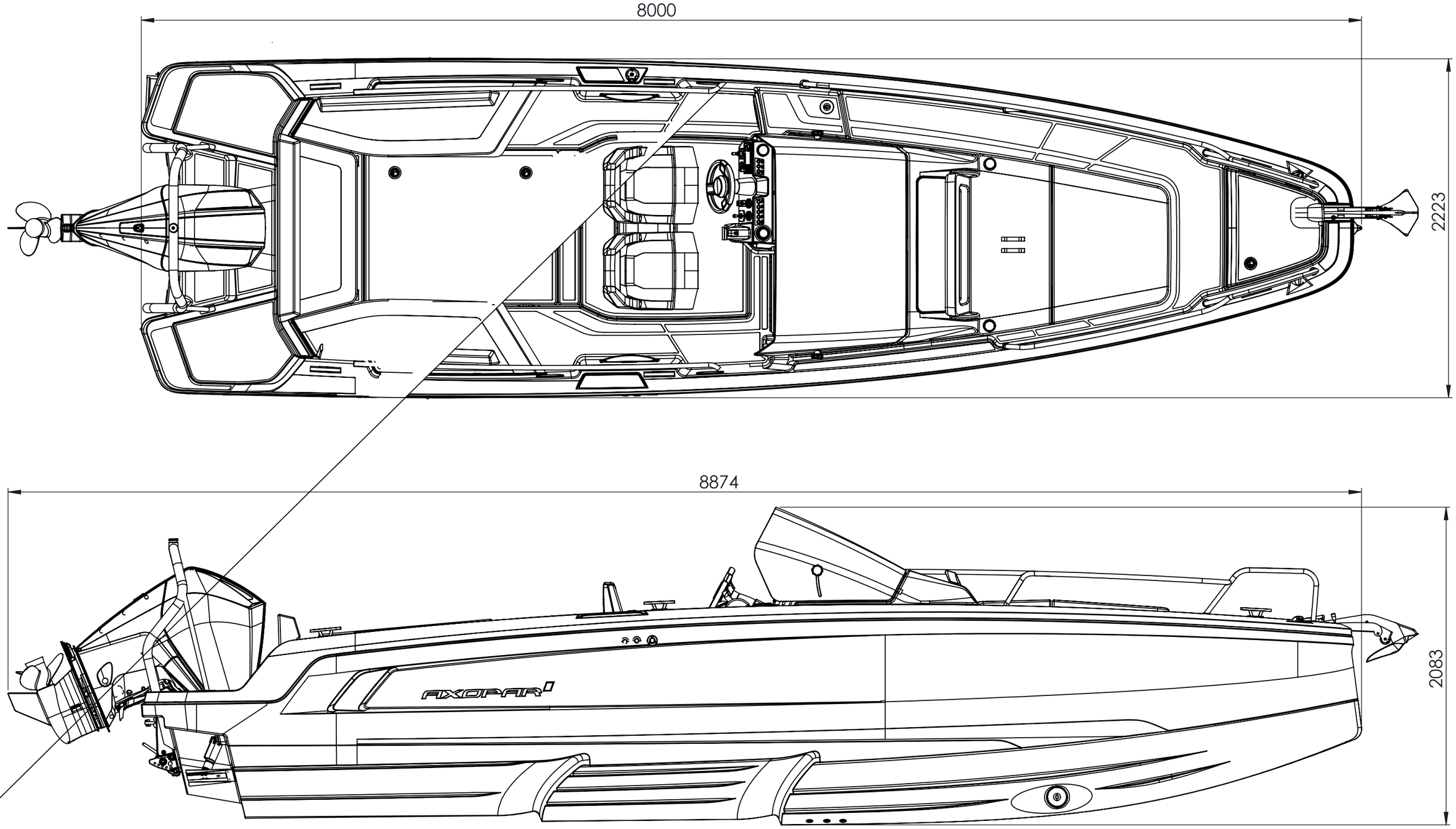

This document and the information contained in it is proprietary and confidential information of Axopar Boats Oy. Neither this document nor any of the information contained herein may be reproduced, disclosed to others, or used for any purpose other than for the purpose it has been provided without the prior written permission of Axopar Boats Oy.

AXOPAR			ITEM	REV	
BOAT MODEL		MODEL YEAR	DRAWING	REV	
	BY	DATE	DESCRIPTION	SCALE	PAGE
CREATED				1:25	1 / 1
CHECKED			TECHNICAL DESCRIPTION		
ACCEPTED					

DRAFT DRAFT DRAFT

DRAFT DRAFT DRAFT

AXOPAR

Limited Warranty for Axopar Boats

US version 1.0

IMPORTANT NOTICE: THIS LIMITED WARRANTY IS SUBJECT TO BINDING ARBITRATION AND A WAIVER OF CLASS ACTIONS, AS DESCRIBED IN SECTION 7. Please also read the limitations and disclaimers in Sections 3(D), 3(E) and 6 regarding Boats.

Limited Warranty

Axopar Boats Ltd ("*Axopar*") warrants to the original retail purchaser ("*Purchaser*") of an Axopar boat manufactured and equipped with a hull identification number by Axopar ("*Boat*") and sold at retail by an authorized dealer ("*Dealer*") that Axopar will repair or replace defective materials and workmanship found during the applicable warranty period, subject to the limitations, exclusions and other conditions provided below. The decision to repair or replace will be made by Axopar in its sole discretion, and all repairs must occur at the location specified by Axopar (the "*Service Location*"). This Limited Warranty gives the Purchaser specific legal rights and Purchaser may have other legal rights, which vary from state to state.

1. Applicability

This Limited Warranty is valid worldwide during the applicable warranty period and applies only to Boats purchased by consumers and operated under normal, non-commercial use in compliance with the relevant owner's manual. Any warranty for Boats intended for commercial use must be separately agreed upon in writing between Axopar and the Purchaser.

The Limited Warranty also covers any equipment installed in the Boat by Axopar as an integral part of the delivery but excludes (i) equipment covered by a separate warranty, as further specified below in Sections 2 (Warranty Provider) and 3 (Warranty Period and Limitations) and (ii) any items installed by the Dealer in the Boat or included by the Dealer with the Boat. Equipment acquired by the Purchaser from third parties and which are not included in the original delivery are not covered under this Limited Warranty.

The hull identification number of the Boat and other particulars relevant to this Limited Warranty are recorded in the applicable sales contract and/or in the Boat's warranty certificate.

2. Warranty Provider

This Limited Warranty is provided solely by Axopar. Contact details are shown in the warranty certificate provided to the Purchaser upon delivery of the Boat. All warranties provided by the manufacturers and distributors of components, equipment and parts of the Boat are hereby assigned to the Purchaser to the extent permitted by the applicable manufacturers and distributors, as Purchaser's sole and exclusive remedy with respect to those items.

3. Warranty Period and Limitations

The Limited Warranty is valid from the delivery date of the Boat to the Purchaser, as reflected in the Boat's warranty certificate (the "*Delivery Date*"), for the time periods identified below.

(A) ***Five-Year Limited Warranty on Structural Hull:***

Axopar will repair or replace any substantial defect in material or workmanship in the Boat's structural hull that is reported within five years from the Delivery Date. The structural hull means the fiberglass molded shell and all its integral structural components. A defect is substantial if it causes the Boat to be unfit or unsafe for general use as a pleasure craft under normal operating conditions.

(B) ***Two-Year Limited Warranty on Components Manufactured or Installed by Axopar:***

Axopar will repair or replace any components manufactured or installed by Axopar that are defective in factory materials or workmanship and are reported within two years from the Delivery Date (and are not already addressed in the specific warranties provided in paragraphs (A) and (C)).

(C) ***One-Year Limited Warranty on Upholstered Items, Canvas, Floor Materials, Other Coating and Painted Parts:***

Axopar will repair or replace any upholstered items, canvas, floor materials, other coating, and painted parts manufactured or installed by Axopar that are defective in factory materials or workmanship and are reported within one year from the Delivery Date.

(D) ***Exclusions***

The Limited Warranty does not apply to or cover the following items: (1) any costs incurred from hauling or transporting the Boat to and from the Service Location; (2) any equipment, parts or accessories not installed by Axopar or that carry their own individual warranties provided by third parties, including but not limited to engines, propellers, pre-rigging equipment, batteries, generators, A/C units, steering mechanisms and other electronic equipment; (3) minor changes to the Boat's external surfaces that have no influence on the strength or serviceability of the Boat, including but not limited to any damage, deterioration, fading or discoloration or mold of cushions, cracking, fading or oxidation of gel coat, stress lines, anti-fouling bottom paint or other slight irregularities in paint work, lacquer work, woodwork or chrome finish or other minor surface blemishes; (4) windshield damage or leakage; (5) any damage resulting from Purchaser's or a third party's negligence, willful misconduct, improper use of the Boat, overloading, powering in excess of the recommended maximum horsepower, improper rigging, misuse or alterations or repairs or attempted repairs on the Boat not authorized by Axopar, including use of an improper trailer, Boat lift or sling; (6) failure of the Purchaser or any third party to use, maintain or store the Boat as specified in the owner's manual, or any other failure to provide reasonable care and maintenance; (7) normal wear and tear items, including but not limited to ropes, filters, bulbs and batteries; (8) any representation or implication of the Boat's properties or characteristics, such as speed, weight, range, performance or fuel consumption; (9) any failure or defect not reported to Axopar or Dealer in accordance with Section 4 (Warranty Procedures) of this Limited Warranty; (10) any failure or defect arising from repairs made by unauthorized service providers; (11) any failure or defect arising from acts of nature; and (12) any Boat that was previously salvaged or declared a total loss or constructive loss for any reason.

(E) ***Voiding the Limited Warranty***

This warranty becomes void if: (1) Purchaser sells or otherwise conveys the Boat to a third party during the warranty period and Axopar is not provided with the bill of sale of the Boat and/or the contact information of the new owner; (2) Purchaser uses the Boat in other than non-commercial activities; (3) the Boat is used in a competitive event; (4) any unauthorized modifications or changes are made to the Boat (e.g. structural modification or modifications to electrical systems on board or the programming of its engine or other systems); or (5) the Boat is salvaged or declared a total loss or constructive loss for any reason.

4. Warranty Procedures

To obtain warranty service, Purchaser must notify the Dealer about the failure or defect within a reasonable time after becoming aware of it or after Purchaser should have become aware of it. Upon detecting a defect, the Purchaser is required to take all reasonable steps necessary to prevent the defect from deteriorating further. When reporting any defect, the Purchaser must provide the Boat's hull identification number, a copy of the warranty certificate, a reasonable number of clear and detailed photos of the defect, and a supported or documented explanation regarding when the Boat was purchased and the Dealer from which it was purchased.

After providing notice of the defect to the Dealer, the Dealer will notify Purchaser of the procedures to follow regarding this Limited Warranty. Dealer will then notify Axopar, and upon being notified of the warranty claim by Dealer, Axopar is solely responsible for determining and authorizing in writing the remedial action to be performed.

5. Axopar's Warranty Responsibilities

Axopar has always the right to repair a defect covered by this Limited Warranty if, in view of the nature and extent of the defect, it can be done within a reasonable time and in such a way that it does not result in repair costs or material detriment to the Purchaser. All repairs shall be carried out in a way and at the Service Location designated by Axopar.

If Axopar determines that repair is not possible, Purchaser has the right to a discount proportionate to the defect. Alternatively, Axopar may, in its sole discretion, offer to Purchaser a replacement Boat with a market value equal to the replaced Boat's market value (considering the Boat's age and condition) if it did not have that specific unrepairable defect.

If Axopar reasonably determines that the Boat defect is not covered by the Limited Warranty, Axopar has the right to charge the Purchaser for any costs that arise from inspecting and determining the defect and its cause. Any repair costs and expenses are subject mutual agreement by Axopar and the Purchaser.

6. Sole Remedy and Other Limitations

The repair, discount and replacement obligations specified in Section 5 (Axopar's Warranty Responsibilities) for parts or materials covered by this Limited Warranty are Purchaser's sole and exclusive remedy, and Axopar's sole obligations, for any claims whatsoever or any losses resulting from product failure.

This Limited Warranty the final, complete and exclusive warranty offered by Axopar regarding the Boat, and no other person or entity (including the Dealer or their respective sales agents or employees) is authorized to make any other warranties or representations on behalf of Axopar. **EXCEPT FOR THE EXPRESS LIMITED WARRANTIES PROVIDED IN THIS LIMITED WARRANTY, AXOPAR DISCLAIMS ALL OTHER EXPRESS AND IMPLIED WARRANTIES AND REPRESENTATIONS OF ANY KIND, INCLUDING ANY IMPLIED WARRANTY OF MERCHANTABILITY, AND FITNESS FOR A PARTICULAR PURPOSE. EXCEPT AS OTHERWISE PROVIDED IN THIS LIMITED WARRANTY, ALL BOATS ARE PROVIDED "AS IS" AND "WITH ALL FAULTS".** If and to the extent that an implied warranty cannot be disclaimed, that warranty is limited to duration of the respective express Limited Warranty provided herein. Some states do not allow the exclusion of implied warranties or do not allow limitations on the amount of time an implied warranty lasts, so the above limitations may not apply to some Purchasers.

To the extent permitted by applicable law, Axopar disclaims all liability to Purchaser and third parties for any economic loss arising from claims of product failure, negligence, defective design, lack of seaworthiness, manufacturing defect and any other liability not expressly covered in this Limited Warranty. **TO THE EXTENT PERMITTED BY APPLICABLE LAW, NEITHER AXOPAR NOR DEALER SHALL UNDER ANY CIRCUMSTANCES BE LIABLE FOR ANY INDIRECT, CONSEQUENTIAL, SPECIAL, ENHANCED, OR PUNITIVE DAMAGES, INCLUDING LOSS OF THE BOAT, PROFIT, PRODUCTIVITY, BUSINESS, CONTRACTS, REVENUES OR ANTICIPATED SAVINGS, OR INCREASED COSTS OR EXPENSES, AND IN NO EVENT SHALL AXOPAR'S LIABILITY EXCEED THE ACTUAL AMOUNT PAID BY PURCHASER FOR THE BOAT.** Some states do not allow the exclusion or limitation of incidental or consequential damages, so the above limitation or exclusion may not apply to every Purchaser.

If, at any time, any provision of this Limited Warranty is or becomes illegal, invalid or unenforceable in any respect under the laws of any jurisdiction, the legality, validity or enforceability of the remaining provisions will remain unaffected.

7. Arbitration and Limitation on Actions

PLEASE READ THIS SECTION CAREFULLY. WE WANT YOU TO KNOW HOW IT AFFECTS YOUR RIGHTS.

(A) *Customer Service and FAQs*

In the unlikely event that an issue, concern or claim (including legal claims) remains unresolved after the procedure specified in Section 4 (Warranty Procedures) and the issue has been escalated to Axopar, Purchaser and Axopar each agree to discuss any issue informally for at least 30 days. Purchaser can do this by sending your full name and contact information, your concern and your requested solution to Axopar at warranty@axopar.fi, Attn: Legal Department. If Axopar would like to discuss an issue with Purchaser, Axopar will contact you at the address provided to the Dealer.

(B) *Agreement to Arbitrate*

If an agreed solution is not reached at the end of the 30-day discussion period, Purchaser and Axopar each agree that any issue, concern or claim (including legal claims) that either may have arising out of or relating to this Limited Warranty must be resolved through final binding arbitration before the American Arbitration Association using its Consumer Arbitration Rules, available at https://www.adr.org/sites/default/files/Consumer%20Rules.pdf (the "*AAA Rules*") or available by calling the American Arbitration

Association at 1-800-778-7879. As an exception to this agreement to arbitrate, Axopar gives you the right to pursue in small claims court any claim that is within that court's jurisdiction, so long as you proceed solely on an individual basis. A party who intends to seek arbitration must first send to the other party, by certified or registered mail, a written notice of dispute. Purchaser may download or copy a form notice of dispute and a form to initiate arbitration from www.adr.org. Unless Purchaser and Axopar agree otherwise, the arbitration hearings will take place in a reasonably convenient location for both parties as determined by the arbitrator in accordance with the AAA Rules, and the hearings may be conducted in-person, by videoconference, phone or by the exchange of documents. The arbitrator's decision will be binding and may be enforced and entered as a judgment in any court of competent jurisdiction. If the arbitrator rules against Axopar, Axopar will reimburse Purchaser for reasonable attorneys' fees and costs, regardless of who initiated the arbitration. However, if the arbitrator rules in Axopar's favor, Axopar will not seek reimbursement of attorneys' fees and costs, regardless of who initiated the arbitration.

(C) *Time Limitation; No Class Actions*

To help resolve any issues between us promptly and directly, Axopar and Purchaser agree to begin any arbitration under this Limited Warranty within one year after the claim first arose; otherwise, the claim is waived. Axopar and Purchaser also agree to arbitrate in each of our individual capacities only – not as a representative or member of a class – and each of us expressly waives any right to file a class action or seek relief on a class action basis. Furthermore, unless Purchaser and Axopar agree in writing, the arbitrator may not consolidate more than one person's claims and may not otherwise preside over any form of a representative of class proceeding.

(D) *Confidentiality*

All arbitration proceedings are confidential, unless both Purchaser and Axopar agree otherwise. Arbitration orders and awards required to be filed with applicable courts of competent jurisdiction are not confidential and may be disclosed by the parties to such courts. A party who improperly discloses confidential information will be subject to sanctions. The arbitrator and forum may disclose case filings, case dispositions, and other case information as required by a court order of proper jurisdiction.

DRAFT DRAFT DRAFT

AXOPAR

Limited Warranty for Axopar Boats

Non-US version 1.0

Limited Warranty

Axopar Boats Ltd ("*Axopar*") warrants to the original retail purchaser ("*Purchaser*") of an Axopar boat manufactured and equipped with a hull identification number by Axopar ("*Boat*") and sold at retail by an authorized dealer ("*Dealer*") that Axopar will repair or replace defective materials and workmanship found during the applicable warranty period, subject to the limitations, exclusions and other conditions provided below. The decision to repair or replace will be made by Axopar in its sole discretion, and all repairs must occur at the location specified by Axopar (the "*Service Location*"). This Limited Warranty gives the Purchaser specific legal rights and Purchaser may have other legal rights, which vary from country to country.

1. Applicability

This Limited Warranty is valid worldwide during the applicable warranty period and applies only to Boats purchased by consumers and operated under normal, non-commercial use in compliance with the relevant Axopar owner's manual. Any warranty for Boats intended for commercial use must be separately agreed upon in writing between Axopar and the Purchaser.

The Limited Warranty also covers any equipment installed in the Boat by Axopar as an integral part of the delivery but excludes (i) equipment covered by a separate warranty, as further specified below in Sections 2 (Warranty Provider) and 3 (Warranty Period and Limitations) and (ii) any items installed by the Dealer in the Boat or included by the Dealer with the Boat. Equipment acquired by the Purchaser from third parties and which are not included in the original delivery are not covered under this Limited Warranty.

The hull identification number of the Boat and other particulars relevant to this Limited Warranty are recorded in the applicable sales contract and/or in the Boat's warranty certificate.

2. Warranty Provider

This Limited Warranty is provided solely by Axopar. Contact details are shown in the warranty certificate provided to the Purchaser upon delivery of the Boat. All warranties provided by the manufacturers and distributors of components, equipment and parts of the Boat are hereby assigned to the Purchaser to the extent permitted by the applicable manufacturers and distributors, as Purchaser's sole and exclusive remedy with respect to those items.

3. Warranty Period and Limitations

The Limited Warranty is valid from the delivery date of the Boat to the Purchaser, as reflected in the Boat's warranty certificate (the "*Delivery Date*"), for the time periods identified below.

(A) ***Five-Year Limited Warranty on Structural Hull:***

Axopar will repair or replace any substantial defect in material or workmanship in the Boat's structural hull that is reported within five years from the Delivery Date. The structural hull means the fiberglass molded shell and all its integral structural components. A defect is substantial if it causes the Boat to be unfit or unsafe for general use as a pleasure craft under normal operating conditions.

(B) ***Two-Year Limited Warranty on Components Manufactured or Installed by Axopar:***

Axopar will repair or replace any components manufactured or installed by Axopar that are defective in factory materials or workmanship and are reported within two years from the Delivery Date (and are not already addressed in the specific warranties provided in paragraphs (A) and (C)).

(C) ***One-Year Limited Warranty on Upholstered Items, Canvas, Floor Materials, Other Coating and Painted Parts:***

Axopar will repair or replace any upholstered items, canvas, floor materials, other coating, and painted parts manufactured or installed by Axopar that are defective in factory materials or workmanship and are reported within one year from the Delivery Date.

(D) ***Exclusions***

The Limited Warranty does not apply to or cover the following items: (1) any costs incurred from hauling or transporting the Boat to and from the Service Location; (2) any equipment, parts or accessories not installed by Axopar or that carry their own individual warranties provided by third parties, including but not limited to engines, propellers, pre-rigging equipment, batteries, generators, A/C units, steering mechanisms and other electronic equipment; (3) minor changes to the Boat's external surfaces that have no influence on the strength or serviceability of the Boat, including but not limited to any damage, deterioration, fading or discoloration or mold of cushions, cracking, fading or oxidation of gel coat, stress lines, anti-fouling bottom paint or other slight irregularities in paint work, lacquer work, woodwork or chrome finish or other minor surface blemishes; (4) windshield damage or leakage; (5) any damage resulting from Purchaser's or a third party's negligence, willful misconduct, improper use of the Boat, overloading, powering in excess of the recommended maximum horsepower, improper rigging, misuse or alterations or repairs or attempted repairs on the Boat not authorized by Axopar, including use of an improper trailer, Boat lift or sling; (6) failure of the Purchaser or any third party to use, maintain or store the Boat as specified in the owner's manual, or any other failure to provide reasonable care and maintenance; (7) normal wear and tear items, including but not limited to ropes, filters, bulbs and batteries; (8) any representation or implication of the Boat's properties or characteristics, such as speed, weight, range, performance or fuel consumption; (9) any failure or defect not reported to Axopar or Dealer in accordance with Section 4 (Warranty Procedures) of this Limited Warranty; (10) any failure or defect arising from repairs made by unauthorized service providers; (11) any failure or defect arising from acts of nature; and (12) any Boat that was previously salvaged or declared a total loss or constructive loss for any reason.

(E) ***Voiding the Limited Warranty***

This warranty becomes void if: (1) Purchaser sells or otherwise conveys the Boat to a third party during the warranty period and Axopar is not provided with the bill of sale of the Boat

and/or the contact information of the new owner; (2) Purchaser uses the Boat in other than non-commercial activities; (3) the Boat is used in a competitive event; (4) any unauthorized modifications or changes are made to the Boat (e.g. structural modification or modifications to electrical systems on board or the programming of its engine or other systems); or (5) the Boat is salvaged or declared a total loss or constructive loss for any reason.

4. Warranty Procedures

To obtain warranty service, Purchaser must notify the Dealer about the failure or defect within a reasonable time after becoming aware of it or after Purchaser should have become aware of it. Upon detecting a defect, the Purchaser is required to take all reasonable steps necessary to prevent the defect from deteriorating further. When reporting any defect, the Purchaser must provide the Boat's hull identification number, a copy of the warranty certificate, a reasonable number of clear and detailed photos of the defect, and a supported or documented explanation regarding when the Boat was purchased and the Dealer from which it was purchased.

After providing notice of the defect to the Dealer, the Dealer will notify Purchaser of the procedures to follow regarding this Limited Warranty. Dealer will then notify Axopar, and upon being notified of the warranty claim by Dealer, Axopar is solely responsible for determining and authorizing in writing the remedial action to be performed.

5. Axopar's Warranty Responsibilities

Axopar has always the right to repair a defect covered by this Limited Warranty if, in view of the nature and extent of the defect, it can be done within a reasonable time and in such a way that it does not result in repair costs or material detriment to the Purchaser. All repairs shall be carried out in a way and at the Service Location designated by Axopar.

If Axopar determines that repair is not possible, Purchaser has the right to a discount proportionate to the defect. Alternatively, Axopar may, in its sole discretion, offer to Purchaser a replacement Boat with a market value equal to the replaced Boat's market value (considering the Boat's age and condition) if it did not have that specific unrepairable defect.

If Axopar reasonably determines that the Boat defect is not covered by the Limited Warranty, Axopar has the right to charge the Purchaser for any costs that arise from inspecting and determining the defect and its cause. Any repair costs and expenses are subject mutual agreement by Axopar and the Purchaser.

6. Sole Remedy and Other Limitations

The repair, discount and replacement obligations specified in Section 5 (Axopar's Warranty Responsibilities) for parts or materials covered by this Limited Warranty are Purchaser's sole and exclusive remedy, and Axopar's sole obligations, for any claims whatsoever or any losses resulting from product failure.

This Limited Warranty the final, complete and exclusive warranty offered by Axopar regarding the Boat, and no other person or entity (including the Dealer or its respective sales agents or employees) is authorized to make any other warranties or representations on behalf of Axopar. **EXCEPT FOR THE EXPRESS LIMITED WARRANTIES PROVIDED IN THIS LIMITED WARRANTY, AXOPAR DISCLAIMS ALL OTHER EXPRESS AND IMPLIED WARRANTIES AND REPRESENTATIONS OF ANY KIND, INCLUDING ANY IMPLIED WARRANTY OF MERCHANTABILITY, AND FITNESS FOR A PARTICULAR PURPOSE. EXCEPT AS OTHERWISE PROVIDED IN THIS LIMITED WARRANTY, ALL BOATS ARE PROVIDED "AS IS" AND "WITH ALL FAULTS".** If and to the extent that an implied warranty cannot be disclaimed, that warranty is limited to duration of the respective express Limited Warranty provided herein. Some countries do not allow the exclusion of implied warranties or do not allow limitations on the amount of time an implied warranty lasts, so the above limitations may not apply to some Purchasers.

To the extent permitted by applicable law, Axopar disclaims all liability to Purchaser and third parties for any economic loss arising from claims of product failure, negligence, defective design, lack of seaworthiness, manufacturing defect and any other liability not expressly covered in this Limited Warranty. **TO THE EXTENT PERMITTED BY APPLICABLE LAW, NEITHER AXOPAR NOR DEALER SHALL UNDER ANY CIRCUMSTANCES BE LIABLE FOR ANY INDIRECT, CONSEQUENTIAL, SPECIAL, ENHANCED, OR PUNITIVE DAMAGES, INCLUDING LOSS OF THE BOAT, PROFIT, PRODUCTIVITY, BUSINESS, CONTRACTS, REVENUES OR ANTICIPATED SAVINGS, OR INCREASED COSTS OR EXPENSES, AND IN NO EVENT SHALL AXOPAR'S LIABILITY EXCEED THE ACTUAL AMOUNT PAID BY PURCHASER FOR THE BOAT.** Some countries do not allow the exclusion or limitation of incidental or consequential damages, so the above limitation or exclusion may not apply to every Purchaser.

If, at any time, any provision of this Limited Warranty is or becomes illegal, invalid or unenforceable in any respect under the laws of any jurisdiction, the legality, validity or enforceability of the remaining provisions will remain unaffected.

7. Arbitration and Limitation on Actions

PLEASE READ THIS SECTION CAREFULLY. WE WANT YOU TO KNOW HOW IT AFFECTS YOUR RIGHTS.

(A) *Customer Service and FAQs*

In the unlikely event that an issue, concern or claim (including legal claims) remains unresolved after the procedure specified in Section 4 (Warranty Procedures) and the issue has been escalated to Axopar, Purchaser and Axopar each agree to discuss any issue informally for at least 30 days. Purchaser can do this by sending your full name and contact information, your concern and your requested solution to Axopar at warranty@axopar.fi, Attn: Legal Department. If Axopar would like to discuss an issue with Purchaser, Axopar will contact you at the address provided to the Dealer.

(B) *Agreement to Arbitrate*

If an agreed solution is not reached at the end of the 30-day discussion period, Purchaser and Axopar each agree that any issue, concern or claim (including legal claims) that either may have arising out of or relating to this Limited Warranty must be resolved through final binding arbitration. The arbitrator's decision will be binding and may be enforced and entered as a judgment in any court of competent jurisdiction. If the arbitrator rules against Axopar, Axopar will reimburse Purchaser for reasonable attorneys' fees and costs, regardless of who initiated the arbitration. However, if the arbitrator rules in Axopar's favor, Axopar will not seek reimbursement of attorneys' fees and costs, regardless of who initiated the arbitration.

(C) *Time Limitation; No Class Actions*

To help resolve any issues between us promptly and directly, Axopar and Purchaser agree to begin any arbitration under this Limited Warranty within one year after the claim first arose; otherwise, the claim is waived. Axopar and Purchaser also agree to arbitrate in each of our individual capacities only – not as a representative or member of a class – and each of us expressly waives any right to file a class action or seek relief on a class action basis. Furthermore, unless Purchaser and Axopar agree in writing, the arbitrator may not consolidate more than one person's claims and may not otherwise preside over any form of a representative of class proceeding.

(D) *Confidentiality*

All arbitration proceedings are confidential, unless both Purchaser and Axopar agree otherwise. Arbitration orders and awards required to be filed with applicable courts of competent jurisdiction are not confidential and may be disclosed by the parties to such courts. A party who improperly discloses confidential information will be subject to sanctions. The arbitrator and forum may disclose case filings, case dispositions, and other case information as required by a court order of proper jurisdiction.